Washing Machine

User manual

WA13M8700**

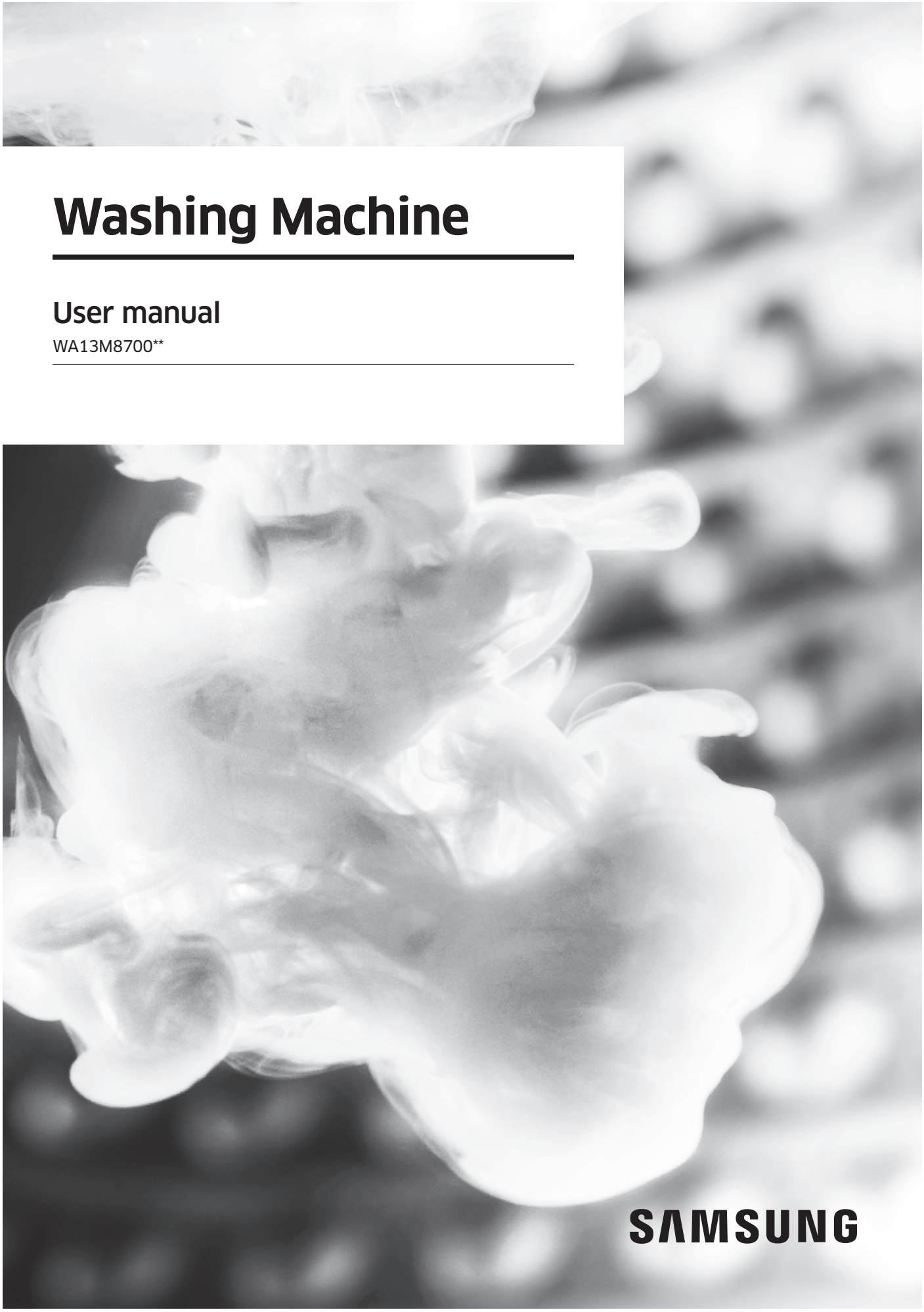

SAMSUNG

Contents

Safety information 3

What you need to know about the safety instructions 3
Important safety symbols 3
Important safety precautions 4

Installation 10

What's included 10
Installation requirements 12
Step-by-step installation 13

Before you start 21

Prewash (Water Jet & Built-in sink) 21
Detergent guidelines 22
Smart Check 24
Laundry guidelines 25

Operations 29

Control panel 29
Simple steps to start 30
Auto cycles 31
Special features 32

Maintenance 34

Cleaning 34

Troubleshooting 40

Checkpoints 40
Information codes 44

Specifications 47

Specification sheet 47

WA8700K(HEATER)_03520W-00_EN.indd 2 2017-01-24 7:57:49

Safety information

Congratulations on your new Samsung washing machine. This manual contains important information on the installation, use and care of your appliance. Please take some time to read this manual to take full advantage of your washing machine's many benefits and features.

What you need to know about the safety instructions

Please read this manual thoroughly to ensure that you know how to safely and efficiently operate the extensive features and functions of your new appliance. Please store the manual in a safe location close to the appliance for future reference. Use this appliance only for its intended purpose as described in this instruction manual.
Warnings and Important Safety Instructions in this manual do not cover all possible conditions and situations that may occur. It is your responsibility to use common sense, caution and care when installing, maintaining and operating your washing machine.
Because the following operating instructions cover various models, the characteristics of your washing machine may differ slightly from those described in this manual and not all warning signs may be applicable. If you have any questions or concerns, contact your nearest service center or find help and information online at www.samsung.com.

Important safety symbols

What the icons and signs in this user manual mean:

⚠ **WARNING**

Hazards or unsafe practices that may result in **severe personal injury, death and/or property damage**.

⚠ **CAUTION**

Hazards or unsafe practices that may result in **personal injury and/or property damage**.

NOTE

Indicates that a risk of personal injury or material damage exists.

WA8700K(HEATER)_03520W-00_EN.indd 3 2017-01-24 7:57:49

Safety information

These warning signs are here to prevent injury to yourself and others.
Please follow them explicitly.
After reading this manual, store it in a safe place for future reference.

Read all instructions before using the appliance.

As with any equipment that uses electricity and moving parts, potential hazards exist. To safely operate this appliance, familiarize yourself with its operation and exercise care when using it.

Important safety precautions

⚠ WARNING

To reduce the risk of fire, electric shock, or injury to persons when using your appliance, follow basic precautions, including the following:

1. This appliance is not intended for use by persons (including children) with reduced physical, sensory or mental capabilities, or lack of experience and knowledge, unless they have been given supervision or instruction concerning use of the appliance by a person responsible for their safety.
2. For use in Europe: This appliance can be used by children aged from 8 years and above and persons with reduced physical, sensory or mental capabilities or lack of experience and knowledge if they have been given supervision or instruction concerning use of the appliance in a safe way and understand the hazards involved. Children shall not play with the appliance. Cleaning and user maintenance shall not be made by children without supervision.
3. Children should be supervised to ensure that they do not play with the appliance.
4. If the supply cord is damaged, it must be replaced by the manufacturer, its service agent or similarly qualified persons in order to avoid a hazard.

WA8700K(HEATER)_03520W-00_EN.indd 4 2017-01-24 7:57:49

5. The new hose-sets supplied with the appliance are to be used and that old hose-sets should not be reused.
6. For washing machines having ventilation openings in the base, the installation instructions shall state that the openings must not be obstructed by a carpet.
7. For use in Europe: Children of less than 3 years should be kept away unless continuously supervised.
8. CAUTION: In order to avoid a hazard due to inadvertent resetting of the thermal cut-out, this appliance must not be supplied through an external switching device, such as a timer, or connected to a circuit that is regularly switched on and off by the utility.

WA8700K(HEATER)_03520W-00_EN.indd 5 2017-01-24 7:57:49

Safety information

Critical installation warnings

⚠ **WARNING**

The installation of this appliance must be performed by a qualified technician or service company.

- Failure to do so may result in electric shock, fire, an explosion, problems with the product, or injury.

Plug the power cord into a wall socket that meets local electrical specifications. Use the socket for this appliance only, and do not use an extension cord.

- Sharing a wall socket with other appliances using a power strip or extending the power cord may result in electric shock or fire.
- Ensure that the power voltage, frequency, and current are the same as those of the product specifications. Failure to do so may result in electric shock or fire. Plug the power plug into the wall socket firmly.

Remove all foreign substances such as dust or water from the power plug terminals and contact points using a dry cloth on a regular basis.

- Unplug the power plug and clean it with a dry cloth.
- Failure to do so may result in electric shock or fire.
- Plug the power plug into the wall socket so that the cord is running towards the floor. If you plug the power plug into the socket in the opposite direction, the electric wires within the cable may be damaged and this may result in electric shock or fire.

This appliance must be properly grounded.
Do not ground the appliance to a gas pipe, plastic water pipe, or telephone line.

- This may result in electric shock, fire, an explosion, or problems with the product.
- Never plug the power cord into a socket that is not grounded correctly and make sure that it is in accordance with local and national regulations.

Do not install this appliance near a heater or any inflammable material.
Do not install this appliance in a humid, oily or dusty location, or in a location exposed to direct sunlight or water (rain drops).

Do not install this appliance in a location exposed to low temperatures.

- Frost may cause the tubes to burst.

Do not use an electric transformer.

- This may result in electric shock or fire.

Do not use a damaged power plug, damaged power cord, or loose wall socket.

- This may result in electric shock or fire.

WA8700K(HEATER)_03520W-00_EN.indd 6 2017-01-24 7:57:49

Do not pull or excessively bend the power cord.
Do not twist or tie the power cord.
Do not hook the power cord over a metal object, place a heavy object on the power cord, insert the power cord between objects, or push the power cord into the space behind the appliance.

- This may result in electric shock or fire.

This appliance should be positioned so that the power plug, the water supply taps, and the drain pipes are accessible.

Installation cautions

⚠ **CAUTION**

This appliance should be positioned in such a way that the power plug is easily accessible.

- Failure to do so may result in electric shock or fire due to electric leakage.

Critical usage warnings

⚠ **WARNING**

If the appliance is flooded, turn off the water & power supplies immediately and contact your nearest service center.

- Do not touch the power plug with wet hands.
- Failure to do so may result in electric shock.

If the appliance generates a strange noise, a burning smell, or smoke, unplug the power plug immediately and contact your nearest Samsung Customer Service.

- Failure to do so may result in electric shock or fire.

In the event of a gas leak (such as propane gas, LP gas, etc.), ventilate immediately without touching the power plug. Do not touch the appliance or power cord.

- Do not use a ventilating fan.
- A spark may result in an explosion or fire.

Do not let children play in or on the washing machine. In addition, when disposing of the appliance, remove the lid.

- If trapped inside the product, children may suffocate to death.

WA8700K(HEATER)_03520W-00_EN.indd 7 2017-01-24 7:57:49

Safety information

Do not wash items contaminated with gasoline, kerosene, benzene, paint thinner, alcohol or other inflammable or explosive substances.

- This may result in electric shock, fire, or an explosion.

Do not touch the power plug with wet hands.

- This may result in electric shock.

Do not insert your hand or a metal object under the washing machine while an operation is in progress.

- This may result in injury.

Do not attempt to repair, disassemble, or modify the appliance yourself.

- Do not use a fuse (such as copper, steel wire, etc.) other than a standard fuse.
- When the appliance needs to be repaired or reinstalled, contact your nearest service center.
- Failure to do so may result in electric shock, fire, problems with the product, or injury.
- In this case, the product will not be covered by the standard warranty provided by Samsung and no responsibility can be attributed to Samsung for malfunctions or damages resulting from doing it.

Unplug the power plug when the appliance is not being used for long periods of time or during a thunder or lightning storm.

- Failure to do so may result in electric shock or fire.

Do not put your hand into the spinning tub during the spin cycle.

- This may result in injury. If the tub does not stop spinning within 15 seconds after you open the lid, contact your nearest Samsung Customer Service.

Do not let children (or pets) play in or on your washing machine.
The washing machine door does not open easily from the inside and children may be seriously injured if trapped inside.

Do not use the water to exceed 50 °C when using the hot water in your washing machine.
Plastic parts may be deformed or damaged, and this may result in electric shock or fire.

WA8700K(HEATER)_03520W-00_EN.indd 8 2017-01-24 7:57:49

Usage cautions

⚠ **CAUTION**

When the washing machine is contaminated by a foreign substance such as detergent, dirt, food waste, etc., unplug the power plug and clean the washing machine using a damp, soft cloth.

- Failure to do so may result in discoloration, deformation, damage, or rust.

The product you have purchased is designed for domestic use only.
Using the product for business purposes qualifies as a product misuse. In this case, the product will not be covered by the standard warranty provided by Samsung and no responsibility can be attributed to Samsung for malfunctions or damages resulting from such misuse.

Do not stand on the appliance or place objects (such as laundry, lighted candles, lighted cigarettes, dishes, chemicals, metal objects, etc.) on the appliance.

- This may result in electric shock, fire, problems with the product, or injury.

Do not press the buttons using sharp objects such as pins, knifes, fingernails, etc.

- This may result in electric shock or injury.

Critical cleaning warnings

⚠ **WARNING**

Do not clean the appliance by spraying water directly onto it.

Do not use the a strong acidic cleaning agent.

Before cleaning or performing maintenance, unplug the appliance from the wall socket.

- Failure to do so may result in electric shock or fire.

WA8700K(HEATER)_03520W-00_EN.indd 9 2017-01-24 7:57:49

Installation

Follow these instructions carefully to ensure proper installation of the washing machine and to prevent accidents when doing laundry.

What's included

Make sure all the parts are included in the product package. If you have a problem with the washing machine or the parts, contact a local Samsung customer center or the retailer.

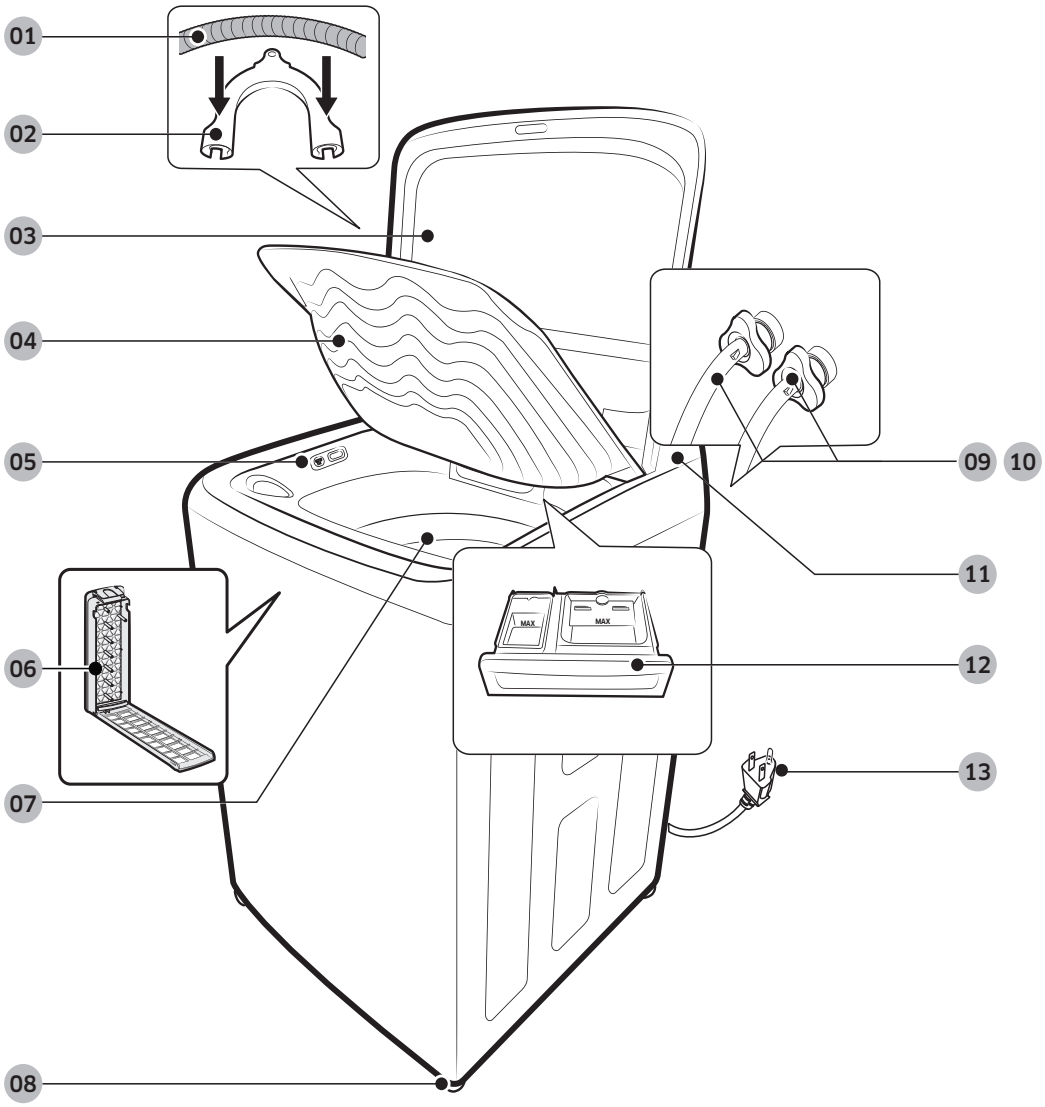

WA8700K(HEATER)_03520W-00_EN.indd 10 2017-01-24 7:57:50

01 Drain hose	**02** Hose guide*	**03** Door
04 Built-in sink	**05** Water Jet	**06** Magic filter
07 Tub	**08** Levelling feet	**09** Water hose (Hot)
10 Water hose (Cold)	**11** Control panel	**12** Detergent drawer
13 Power cord		

NOTE

- Availability of parts with an asterisk (*) depends on your model.
- Door: Make sure to keep the door closed while the washing machine is operating.
- Lint filter: This collects lint that builds up from the laundry being washed.
- Levelling feet: Adjust the feet to level the washing machine on a flat floor.

WA8700K(HEATER)_03520W-00_EN.indd 11 2017-01-24 7:57:50

Installation

Installation requirements

Electrical supply and grounding

⚠ **WARNING**

- AC 220-240 V / 50 Hz fuse or circuit breaker is required.
- Use an individual branch circuit specific to the washing machine.
- Do NOT use an extension cord.
- Use only the power cord that comes with the washing machine.
- Do NOT connect the ground wire to plastic plumbing, gas lines, or hot water pipes.

Levelling

- To prevent tumbling or noise, install the washing machine on a solid, flat floor without a platform or bricks.
- Keep the washing machine at 10 cm from each adjacent wall.

Water supply

- Make sure water taps are easily accessible.
- Turn off the taps when the washing machine is not in use.
- Check for any leaks at the water hose fittings on a regular basis.

Drain

- Make sure the drain hose is not clogged.
- We recommend a standpipe in height of 90-100 cm. The drain hose must be connected through the hose clip to the standpipe, and the standpipe must fully cover the drain hose.
  The standpipe specifications mentioned here are only applicable to pump-type models.

WA8700K(HEATER)_03520W-00_EN.indd 12 2017-01-24 7:57:50

Step-by-step installation

STEP 1 Select a location

Location requirements:

- Solid, level surface without carpeting or flooring that may obstruct ventilation
- Away from direct sunlight
- Adequate room for ventilation and wiring
- The ambient temperature is always higher than the freezing point (0 ˚C)
- Away from a heat source

STEP 2 Leveling your washer

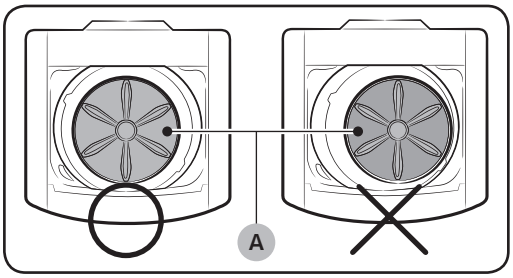

See if the washer is level by checking the position of the tub:

1. Slide the washer into position.
2. Open the lid of the washer, and pour the water into the tub to just below the pulsator level.
3. If the washer is level, the pulsator (A) is positioned at the center of the water as shown in the figure.

WA8700K(HEATER)_03520W-00_EN.indd 13 2017-01-24 7:57:50

Installation

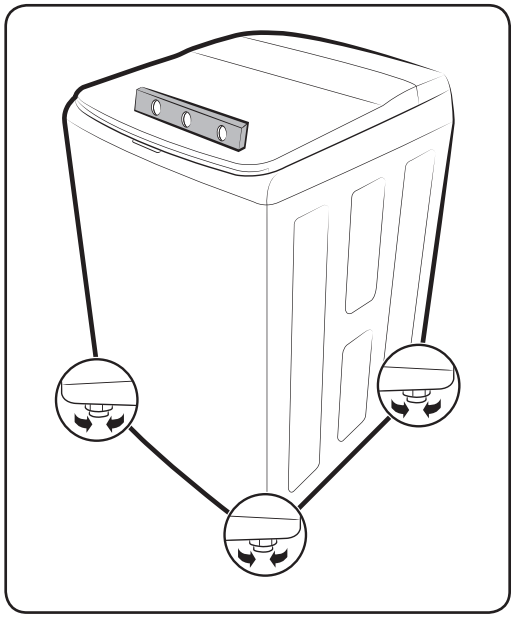

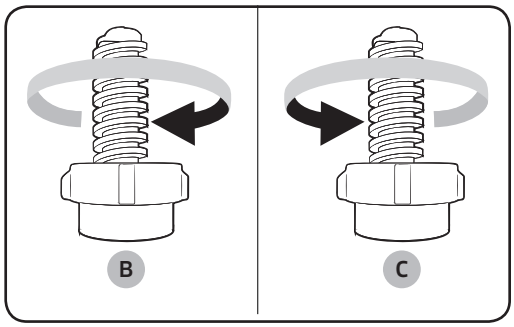

4. If the washer is not level, level your washer by turning the leveling feet clockwise or counterclockwise as necessary.

NOTE

Turn the leveling feet **clockwise (B)** to lower the washer, and **counterclockwise (C)** to raise the washer.

STEP 3 Connect the water hose

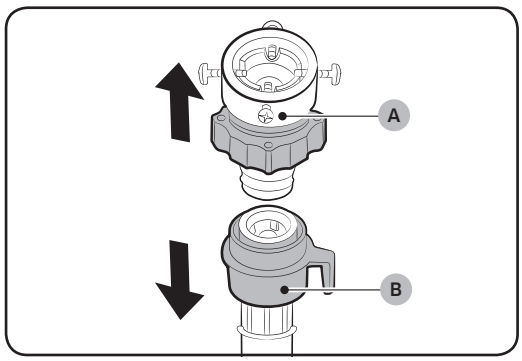

Connect the water hose to the water tap.

1. Remove the **adaptor (A)** from the **water hose (B)**.

WA8700K(HEATER)_03520W-00_EN.indd 14 2017-01-24 7:57:50

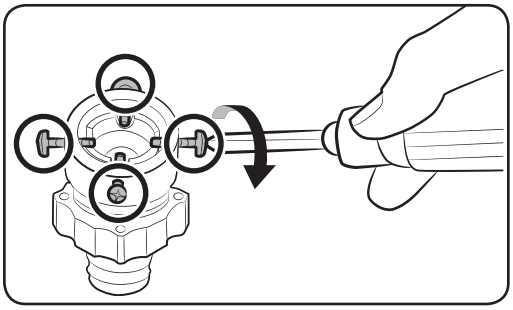

2. Use a Philips screwdriver to loosen four screws on the adaptor.

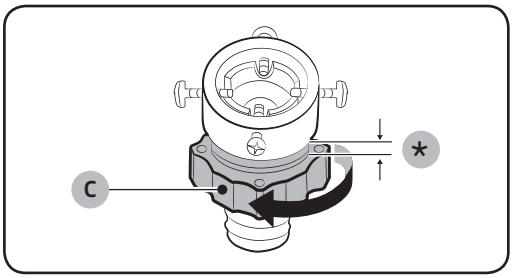

3. Hold the adaptor and turn **part (C)** in the arrow direction to loosen it by 5 mm (*).

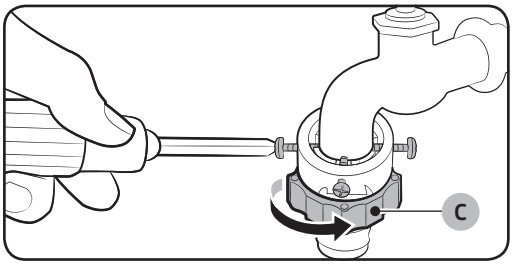

4. Insert the adaptor into the water tap, and tighten the screws while lifting up the adaptor.
5. Turn **part (C)** in the arrow direction to tighten it.

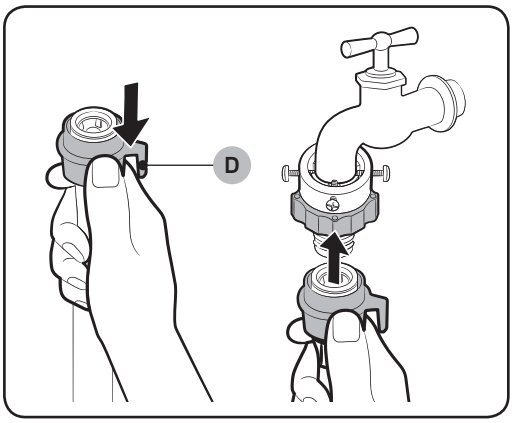

6. While holding down **part (D)**, connect the water hose to the adaptor. Then, release **part (D)**. The hose fits into the adaptor with a clicking sound.

WA8700K(HEATER)_03520W-00_EN.indd 15 2017-01-24 7:57:51

Installation

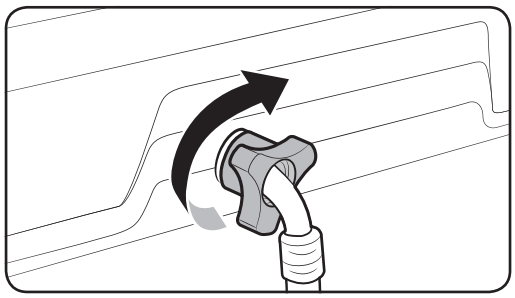

7. Connect the other end of the water hose to the inlet valve on the back of the washing machine. Turn the hose clockwise to tighten.

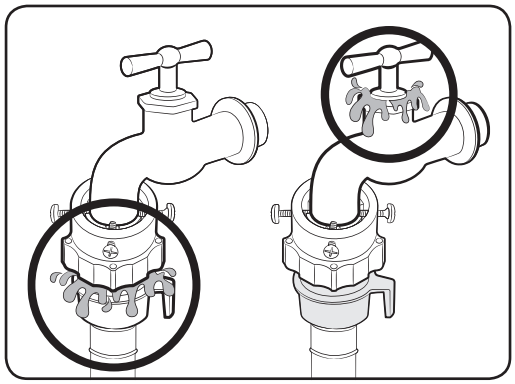

8. Open the water tap and check if there are any leaks around the connection areas.

- If there are water leaks, repeat the steps above.

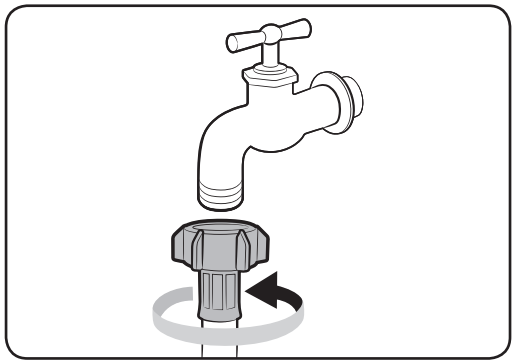

- If using a screw type of water tap, connect the water hose to the water tap as shown.

⚠ **WARNING**

Stop using the washing machine if there is a water leak, and contact a local Samsung service center. Otherwise, this may cause electric shock.

⚠ **CAUTION**

Do not stretch the water hose by force. If the hose is too short, replace the hose with a longer, high-pressure hose.

WA8700K(HEATER)_03520W-00_EN.indd 16 2017-01-24 7:57:51

NOTE

- After connecting the water hose to the adaptor, check if it is connected properly by pulling the water hose downwards.
- Use a standard type of water tap. If the tap is square-shaped or too big, remove the spacer ring before inserting the tap into the adaptor.

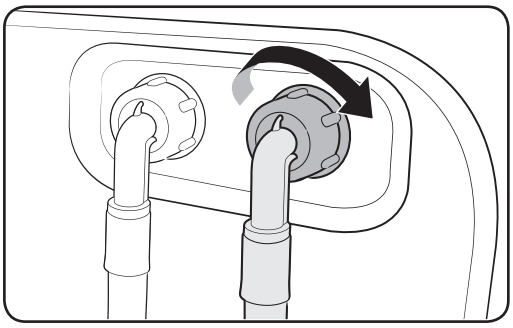

For models with an additional hot water inlet:

1. Connect the red end of the hot water hose to the hot water inlet on the back of the machine.
2. Connect the other end of the hot water hose to the hot water tap.

STEP 4 Position the drain hose

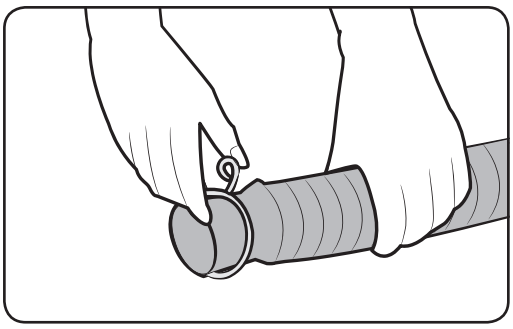

General type

1. Press and hold down the joint ring, and insert it into the drain hose.

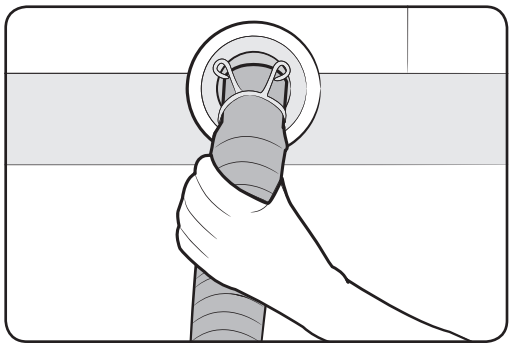

2. Insert the drain hose into the drain outlet. Make sure to connect them firmly using the joint ring.
   The drain hose is extensible. Adjust the length of the drain hose as needed.

WA8700K(HEATER)_03520W-00_EN.indd 17 2017-01-24 7:57:52

Installation

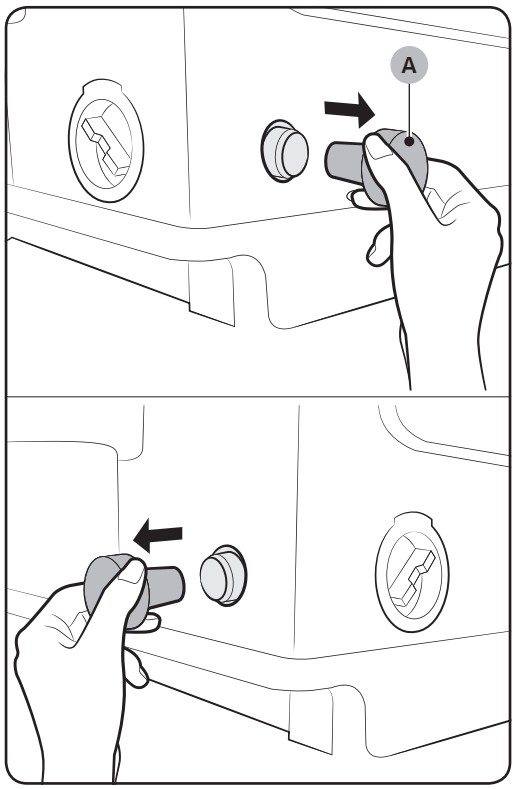

Pump type (Applicable models only)

1. Open the **hose cap (A)**, and insert the drain hose. Tighten the drain hose using the joint ring.

NOTE

- The position (side or rear) of the drain outlet depends on the model.
- Availability of the hose cap depends on the model.

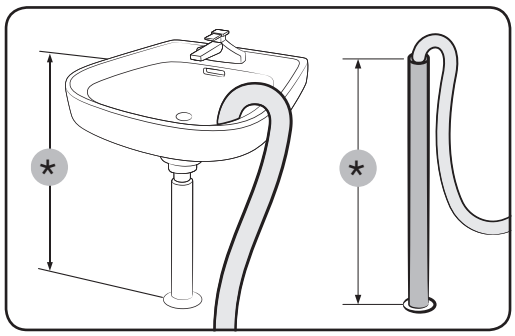

2. Connect the other end of the drain hose to a standpipe or basin that is positioned 90-100 cm (*) from the floor.

WARNING

Make sure the end of the drain hose is not submerged by water. Otherwise, the washing machine may suffer serious damage.

WA8700K(HEATER)_03520W-00_EN.indd 18 2017-01-24 7:57:52

⚠ **CAUTION**

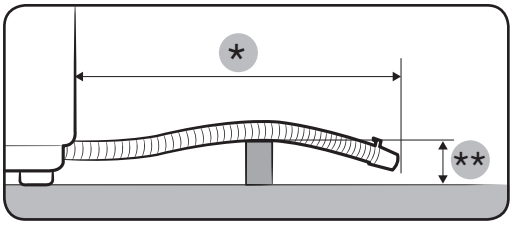

- Do not exceed **3 m (*)** for the total length of extended hoses.
- Do not let the drain hose run over doorsills that protrude **5 cm (**)** or more from the floor.

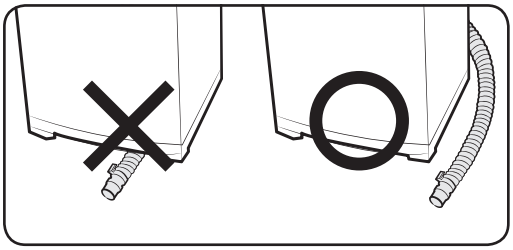

- Do not run the drain hose under the bottom of the machine.

STEP 5 Power on

Plug the power cord into a wall socket featuring an AC 220-240 V / 50 Hz approved electrical outlet protected by a fuse or circuit breaker. Then, press **Power** to turn on the washing machine.

WA8700K(HEATER)_03520W-00_EN.indd 19 2017-01-24 7:57:52

Installation

STEP 6 Running a test cycle

Run a test cycle as follows to check if your washer is properly installed.

1. Load about 6 pounds of laundry into the tub.
2. Press Power to turn on your washer.
3. Press Rinse+Spin on the Cycle panel.
4. Press and hold START/PAUSE to start the test cycle.
5. The washer should not rock or vibrate excessively when water is supplied or when washing or spinning, and should drain well during the spin cycle.

NOTE

If water leaks while water is being supplied or drained, check the water connections. Refer to the "STEP 3 Connect the water hose" section on page 14 for instructions.

NOTE

If the washer rocks and vibrates excessively, level your washer again. Refer to the "STEP 2 Leveling your washer" section on page 13 for instructions.

STEP 7 Calibration Mode

Your Samsung washer detects the laundry weight automatically.
For more accurate weight detection, please run Calibration Mode after the installation.
To run Calibration Mode, follow these steps:

1. Remove laundry or any contents in the machine.
2. Press and hold Temp. and Delay End simultaneously for at least 3 seconds when the power is turned on.
3. Press and hold START/PAUSE to activate Calibration Mode.
4. The pulsator rotates clockwise and counterclockwise approximately 1 minute.
5. When Calibration Mode is finished, “0” appears on the display, and the washer automatically turns off. The washer is now ready for use.

WA8700K(HEATER)_03520W-00_EN.indd 20 2017-01-24 7:57:52

Prewash (Water Jet & Built-in sink)

Water Jet and Built-in sink help you hand-wash before the washing machine starts operation. Water Jet is available only when the door is open and the water level set to less than High. For prewashing, use the Built-in sink that is designed for hand-washing.

CAUTION

- Do not excessively use Water Jet. Excessive use of Water Jet increases water consumption.
- Gently run water into the tub. Otherwise, water may overflow.

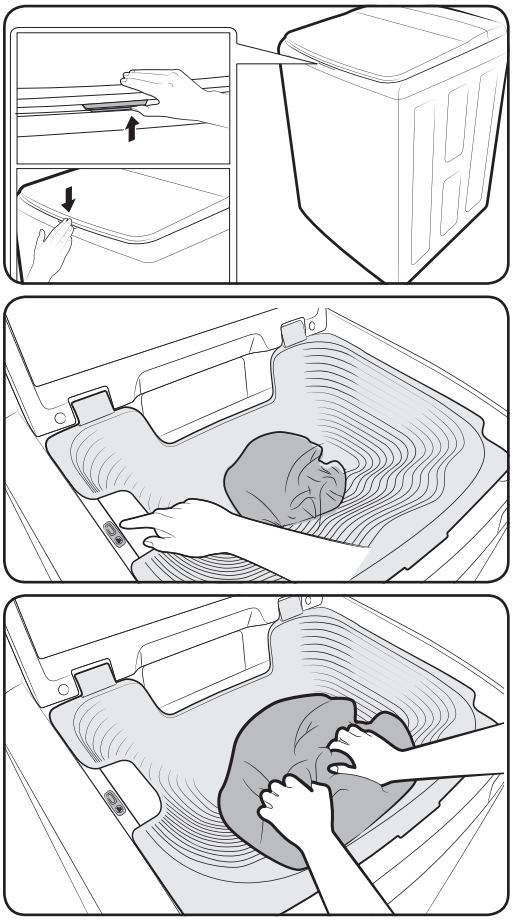

1. Press the release lever on the middle of the door. Put laundry in the Built-in sink.
2. Press **Water Jet** to supply water to the Built-in sink, and then hand-wash.
3. When done, you can either reuse the water for the main cycle or simply drain.
   - To reuse the water, gently lift up the Built-in sink to drain water into the tub.
   - To drain the water, press **Activ Dual Wash**, and then select **Drain**.

NOTE

- If you want to hand-wash while the washing machine is operating, press **START/PAUSE** to stop operation, and then follow steps 1-3 above.
- If you open both the door and the Built-in sink, manually lower the Built-in sink.

WA8700K(HEATER)_03520W-00_EN.indd 21 2017-01-24 7:57:53

Before you start

Detergent guidelines

The washing machine provides a two-compartment dispenser for detergent and fabric softener. The bleach compartment is located on the left side of the tub.

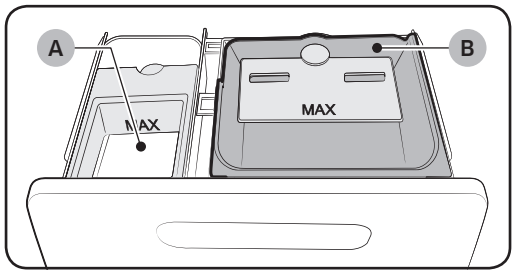

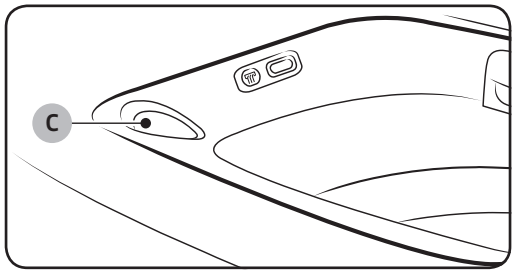

- Softener compartment (A): Add a recommended amount of fabric softener into the softener compartment.
- Liquid detergent compartment (B): Apply a recommended amount of liquid detergent into the compartment. To use powdered detergent, remove the liquid detergent compartment. The washing machine does not dispense the powdered detergent from the liquid detergent compartment.
- Bleach compartment (C): Add non-chlorine bleach as instructed by the manufacturer.

NOTE

- Do not pour color-safe bleach into the bleach compartment.
- Use the softener compartment only for liquid fabric softeners.

WA8700K(HEATER)_03520W-00_EN.indd 22 2017-01-24 7:57:53

To apply detergents

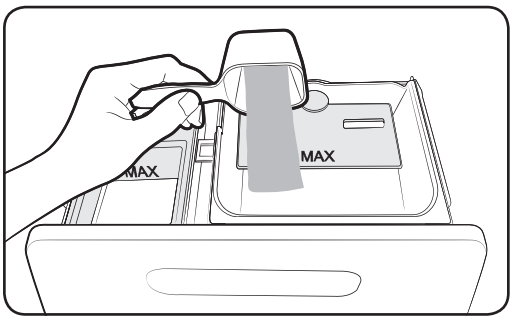

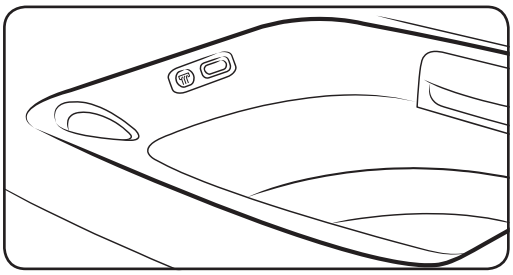

1. Open the door.
2. Locate the detergent drawer, and slide it open.
3. Apply liquid detergent into the liquid detergent compartment.

NOTE

For powder detergent, remove the liquid detergent compartment.

4. Add a recommended amount of fabric softener into the softener compartment.
5. Add a recommended amount of non-chlorine bleach into the bleach compartment.

NOTE

- Do not exceed the max line when applying the cleaning agents.
- To ensure maximum cleaning results, it is recommended that powdered detergent should be thoroughly dissolved in a small amount of water before adding to the machine.

CAUTION

- Do not pour undiluted liquid chlorine bleach directly onto the load or into the tub. This may cause fabric damage.

NOTE

- It is normal for a small amount of water to remain in the detergent compartments at the end of the cycle.
- When adding color-safe bleach, it is recommended to use liquid detergent.
- Do not use liquid fabric softener that is too sticky as it may not mix with the water sufficiently.

WA8700K(HEATER)_03520W-00_EN.indd 23 2017-01-24 7:57:53

Before you start

Smart Check

To enable this function, you must first download the Samsung Smart Washer app at the Play Store or the Apple Store, and install it on a mobile device featuring a camera function.

The Smart Check function has been optimized for Galaxy & iPhone series (applicable models only).

1. Press and hold Rinse Times + Spin Speed simultaneously for 3 seconds to enter the Smart Check mode.
2. The washing machine starts the self-diagnosis procedure and displays an information code if a problem is detected.
3. Run the Samsung Smart Washer app on your mobile device, and tap Smart Check.
4. Put the mobile device close to the washing machine's display so that the mobile device and the washing machine face each other. Then, the information code will be recognized automatically by the app.
5. When the information code is recognized correctly, the app provides detailed information about the problem with applicable solutions.

NOTE

- The function name, Smart Check, may differ depending on the language.
- If there is strong reflected light on the washing machine display, the app may fail to recognize the information code.
- If the app fails to recognize the Smart Check code consecutively, enter the information code manually onto the app screen.

WA8700K(HEATER)_03520W-00_EN.indd 24 2017-01-24 7:57:53

Laundry guidelines

Checkpoints

- Check for stains or dirt. Apply a little detergent to a white towel. Rub the white towel and the dirty clothes together to transfer the dirt or color to the white towel.
- Before washing, pre-treat the sleeves, collars, dress hems, and pockets by brushing with detergent.
- Wrinkle-processed clothes made of wool must be specially treated by tightening them with threads before washing. Remove the threads after washing and drying is complete.

⚠ **CAUTION**

- Do not place or keep blankets in the tub.
- Do not put candles or a heat source in or on the washing machine.
- Do not wash these clothes:
  - Neckties, brassieres, jackets, suits, and coats can be easily deformed by shrinking or discoloring on the surface. These clothes are mostly made of rayon, polynosic, cuff, and/or blended fabric.
  - Wrinkle-processed, embossed, or resin processed clothes easily deform merely by soaking in water.
  - Clothes that are easily discolored made from cotton, wool, wrinkled silk, leather wear and accessories, and leather ornamented clothes and accessories.
  - Waterproof sheets, mattresses, or wool quilts, rain covers, fishing jackets and trousers, skiwear, sleeping bags, diaper covers, sweat suits, vehicle covers for automobiles, bicycles, and motorcycles, bath rugs, and other waterproof items.

WA8700K(HEATER)_03520W-00_EN.indd 25 2017-01-24 7:57:53

Before you start

STEP 1 Sort

Sort the laundry according to these criteria:

- Care Label: Sort the laundry into cottons, mixed fibres, synthetics, silks, wools, and rayon.
- Color: Separate whites from colors.
- Size: Mixing different-sized items together in the tub improves the washing performance.
- Sensitivity: Follow the cloth-specific instructions on the care label of delicate items such as pure, new woollen items, curtains, and silk items.

NOTE

Make sure to check the care label on the clothing, and sort them accordingly before starting the wash.

STEP 2 Empty pockets

Empty all the pockets of your laundry items, and remove dirt and/or soils from them.

- Metal objects such as coins, pins, and buckles on clothing may damage other laundry items as well as the tub.
- Turn clothing with buttons and embroideries inside out.
- If pants or jacket zippers are open while washing, the tub may be damaged.
- Zippers should be closed and fixed with a string.
- Clothing with long strings may become entangled with other clothes. Make sure to tie the strings before washing.

STEP 3 Use a laundry net or wash certain items separately

- Brassieres (water washable) must be placed in a laundry net. Metal parts of the brassieres may break through and tear other laundry items.
- Cashmilon, large volume garments, and lightweight clothes (lace-decorated clothes, lingerie, nylon stocking, and synthetic fabrics) may float on water during washing and cause problems to the machine. Use the laundry net or wash them separately.
- Do not wash the laundry net by itself without other laundry. This may cause abnormal vibrations that could move the washing machine and result in injury.

WA8700K(HEATER)_03520W-00_EN.indd 26 2017-01-24 7:57:53

⚠ **CAUTION**

Make sure to soak inflatable items (such as blankets, and cotton-filled or microfibre quilets) in water before you run a cycle.

- Inflatable items may cause damage to the laundry or the machine during the wash or drying process.
- Regardless of the size, blankets or quilts are safer and cleaner to wash one item at a time. Two different-sized blankets in the same load may compromise the drying performance due to unbalanced loads.

To input a blanket

Fold the blanket as shown, and then put it on the **plastic area (A)** of the tub before inserting into the tub.

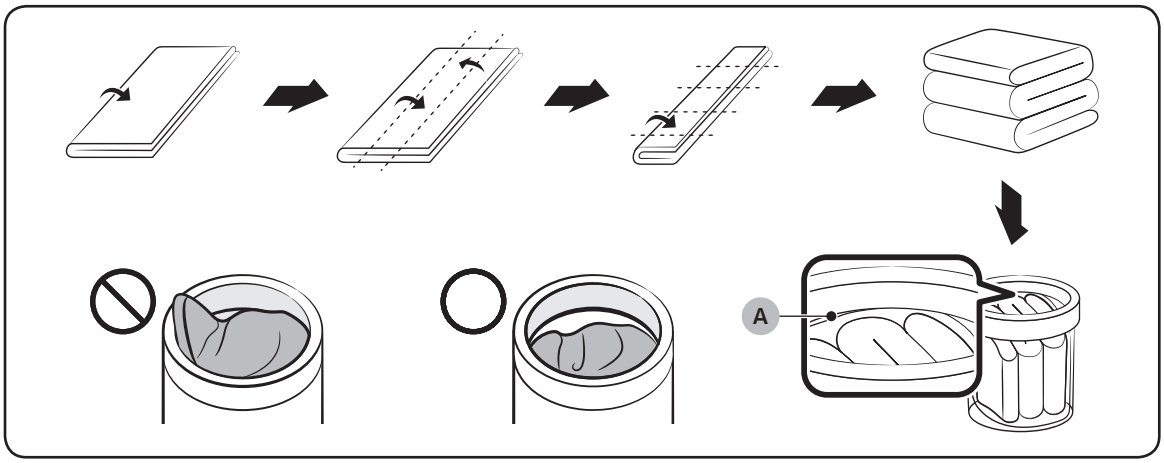

STEP 4 Prewash (if necessary)

- To remove stains and dirt on collars, sleeves, hems, and pockets, apply detergent lightly and brush off.
- Use powder or liquid detergents. Do not use soap, as this may remain on the tub after washing.
- Prewash white socks, sleeves, and collars with a little detergent and a brush.

⚠ **CAUTION**

Make sure the laundry is inserted completely.

- Any exposed part of the laundry may cause damage to the machine or the laundry itself, or a water leak.
- Make sure the laundry does not exceed the **plastic area (A)** in the above figure.

WA8700K(HEATER)_03520W-00_EN.indd 27 2017-01-24 7:57:54

Before you start

STEP 5 Determine the load capacity

Make sure the laundry does not exceed the plastic area (A) in the figure on page 27. Otherwise, it may cause the washing machine to not wash properly or cause damage to the machine or the laundry itself, or a water leak.

NOTE

When washing bedding or bedding covers, the wash time may be lengthened or the spin efficiency may be reduced. For bedding or bedding covers, the recommended load capacity is 3.5kg or less.

CAUTION

If the laundry is unbalanced and the “Ub” information code is displayed, redistribute the load. Unbalanced laundry may reduce the spinning performance and cause damage to the machine or the laundry itself.

STEP 6 Apply a proper detergent type

The type of detergent depends on the type of fabric (cotton, synthetic, delicate items, wool), color, wash temperature, and degree of soiling. Always use “low suds” laundry detergent, which is designed for automatic washing machines.

CAUTION

- Use an appropriate amount of detergent. Excess amounts of detergent do not produce much improvement in washing results but cause damage to the laundry due to deteriorated rinsing performance.
- Bleach is strong alkali in nature, causing damage to or discoloration of the laundry.
- Use a longer or added rinse cycle when using powder detergent that is very likely to remain on the laundry and cause bad odors after washing is complete.
- If an excessive amount of detergent is used especially in cold water, the detergent doesn’t dissolve well, ending up with contaminated laundry, hoses, and/or tub.
- In case of timed washing, do not apply detergent directly to laundry or the tub. The laundry may be discolored. Use the detergent drawer.
- When washing wool using the Wool cycle, use only a neutral detergent to avoid discoloring the laundry.

NOTE

- Follow the detergent manufacturer’s recommendations based on the weight of the laundry, the degree of soiling, and the hardness of the water in your local area. If you are not sure about the water hardness, contact a local water authority.
- Do not use detergent that tends to be hardened or solidified. This detergent may remain after the rinse process, blocking the drain outlet.

WA8700K(HEATER)_03520W-00_EN.indd 28 2017-01-24 7:57:54

Operations

Control panel

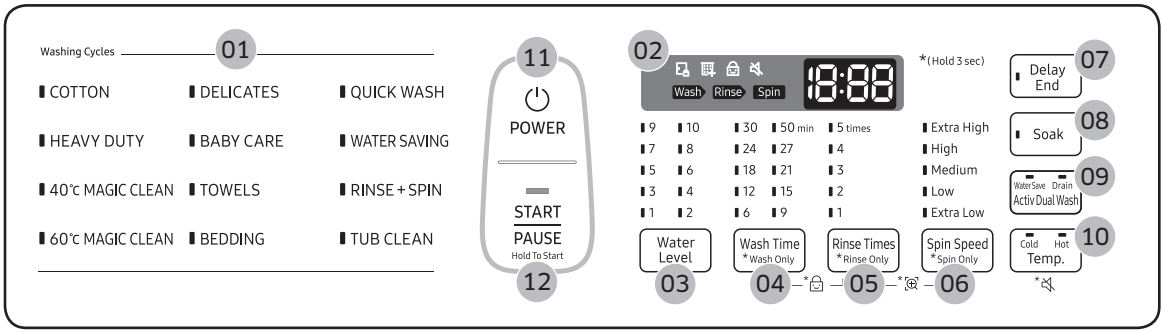

01 Cycle Panel	Press to select a cycle.
02 Display	Displays the current cycle information and estimated time remaining, or an information code if the washing machine needs to be checked.
03 Water Level	Press to change the water level manually.
04 Wash Time	Press to adjust the wash time between 6 to 50 minutes or press and hold to start wash cycle only.
05 Rinse Times	Press to change the number of rinses (maximum 5 rinses) or press and hold to start rinse cycle only.
06 Spin Speed	Press to select a different spin speed or press and hold to start spin cycle only.
07 Delay End	Press to finish the wash at a specified time. To cancel the Delay End settings, simply turn off the washing machine. You can set the Delay End time up to 24 hours.
08 Soak	Press to add soaking time at the start of a cycle for better stain removal.
09 Activ Dual Wash	This button provides two options, and is available only when the washing machine is stopped or in standby. • **Water Save** (default): Select to reuse water remaining in the tub after using Water Jet. The water will be used for the main cycle. • **Drain**: Select to drain water that remains after using Water Jet. When draining is complete, the washing machine switches to Water Save mode automatically.
10 Temp.	Press to toggle between two different water temperature options. • **Cold**: For brightly colored, very lightly soiled items. • **Hot**: For colorfast items.

WA8700K(HEATER)_03520W-00_EN.indd 29 2017-01-24 7:57:54

Operations

11 POWER	Press to turn on/off the washing machine.
12 START/PAUSE	Press and hold to start an operation, or press to stop an operation temporarily.

Simple steps to start

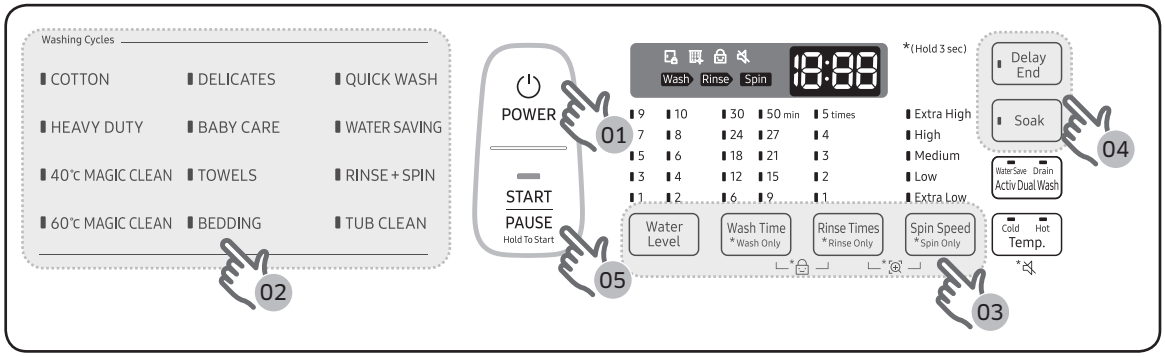

1. Press **POWER** to turn on the washing machine.
2. Select a cycle in the cycle panel.
3. Change the cycle settings (water level, wash time, rinse count, and/or spinning speed) as necessary.
4. To add an option such as **Delay End** and **Soak**, press the corresponding button.
5. Press and hold **START/PAUSE**.

To change the cycle during operation

1. Press **START/PAUSE** to stop operation.
2. Select a different cycle, and repeat steps 2-3 above if necessary.
3. Press and hold **START/PAUSE** again to start the new cycle.

WA8700K(HEATER)_03520W-00_EN.indd 30 2017-01-24 7:57:54

Auto cycles

Cycle	Description
COTTON	• For most fabrics including cottons, linens, and normally soiled items.
HEAVY DUTY	• For sturdy, colorfast fabrics and heavily soiled items.
40 °C MAGIC CLEAN	• Heats the supplied water up to a custom temperature of 40 °C and uses the water to clean heavily soiled or stubborn items in an effective way.
60 °C MAGIC CLEAN	• Heats the supplied water up to a custom temperature of 60 °C and uses the water to clean heavily soiled or stubborn items in an effective way.
DELICATES	• For sheer fabrics, bras, lingerie, silks, and other handwash-only fabrics. For best results, use liquid detergent.
BABY CARE	• Featuring a high-temperature wash and extra rinses to help remove the remaining detergent effectively.
TOWELS	• For bath towels, washcloths, and mats.
BEDDING	• For bulky items such as comforters, blankets, and sheets. • For best results, wash only a single type of bedding.
QUICK WASH	• For lightly soiled items that you want to finish washing quickly.
WATER SAVING	• Select this to wash effectively with a minimum amount of water. • WA13M8700** : "Water saving, Water level 8, Wash 50 min, Rinse 3 times, spin speed medium" is recommended for a normally soiled cotton load. **NOTE** Energy and water labelling test program in accordance with AS/NZS 2040.
RINSE+SPIN	• For loads that need rinsing only or to add rinse-aided fabric softener to.

WA8700K(HEATER)_03520W-00_EN.indd 31 2017-01-24 7:57:54

Operations

Cycle	Description
TUB CLEAN	• Select this to clean the tub. The powerful spinning force removes impurities and bad odors from inside the tub. • A blinking reminds you that it is time to clean the tub using Tub Clean. For details, see the Cleaning section in this manual.

Special features

Child Lock

Child Lock is designed to prevent accidents by children or infants, such as drowning.

1. Press Power.
2. To activate the Child Lock, hold down Wash Time and Rinse Times simultaneously for 3 seconds. The indicator blinks.
3. To deactivate the Child Lock, hold down Wash Time and Rinse Times simultaneously for 3 seconds. The indicator turns off. If the tub has contained water, simply restart the machine and hold down two buttons simultaneously for 3 seconds to deactivate the Child Lock.

With the Child Lock enabled

- You can still manipulate on the control panel while the door is closed. If you open the door, an information code (CL, dC) appears with an alarm. Then, the machine starts forced draining after 30 seconds in order to prevent infant or child accidents such as drowning.
- Only when water supply is complete, the Child Lock becomes active.
- If the door leaves open for 30 seconds with the tub containing water, the machine drains the water with the “CL” code, which you cannot stop.
- To add detergent or more laundry in the tub, or to change the cycle settings, you must first deactivate the Child Lock.

WA8700K(HEATER)_03520W-00_EN.indd 32 2017-01-24 7:57:54

WARNING

If you open the door with the Child Lock enabled, the machine starts forced draining to prevent accidents such as drowning.

NOTE

The Child Lock remains active after you power off the machine. You cannot deactivate the Child Lock as long as the “CL” code appears on the display. But, you can deactivate when the dC code appears by holding down two buttons simultaneously.

Delay End

You can set the washing machine to finish a cycle later. The hour displayed indicates the time the wash will finish.

1. Select a cycle. Then, change the cycle settings if necessary.
2. Press **Delay End** repeatedly until a desired end time is set.
3. Press and hold **START/PAUSE**. The lamp indicator next to the **Delay End** button turns on, and the timer starts.
4. To cancel **Delay End**, restart the washing machine by pressing **POWER**.

Real-life case

You want to finish a two-hour cycle 3 hours from now. To do this, add the Delay End option to the current cycle with a 3-hour setting, and then press and hold **START/PAUSE** at 2:00 p.m. The washing machine starts operating at 3:00 p.m. and ends at 5:00 p.m. Provided below is the timeline for this example.

Soak

Use Soak if the laundry is heavily contaminated or stained. Soak improves the wash performance by adding a soak cycle.

- Soak adds 20 minutes to the cycle time.
- When Soak is complete, the wash cycle starts without draining water.

Sound

To turn the sound on or off, press and hold **Temp.** for 3 seconds.

- You can turn the sound on or off for all cycles.
- When the sound is off, 🔇 turns on.

WA8700K(HEATER)_03520W-00_EN.indd 33 2017-01-24 7:57:55

Maintenance

Cleaning

Keep the washing machine clean to prevent deteriorated performance and to preserve its life cycle.

Exterior

- Use a soft cloth to wipe up all detergent, bleach, or other spills as they occur.
- Clean the control panel with a soft, damp cloth. Do not use abrasive powders or cleaning pads. Do not spray cleaners directly on the panels.

Tub Clean

Regularly run this cycle to clean the tub and to remove bacteria from it.

1. Makes sure the tub is completely empty.
2. Press POWER to turn on the washing machine.
3. Press TUB CLEAN. You can also use Delay End with Tub Clean.
4. Press and hold START/PAUSE.

⚠ **CAUTION**

Only run Tub Clean when the tub is completely empty. This may cause damage to the laundry or a problem with the washing machine.

Tub Clean reminder

- The indicator reminds you of cleaning the tub when necessary. If you happen to see the indicator blinking after washing is complete, remove the laundry and run the Tub Clean cycle.
- You can ignore this reminder and continue to run cycles normally because this is not a system failure. However, the reminder remains active for 6 consecutive cycles immediately after each cycle is complete.
- The reminder is activated once every 1-3 months, depending on the cycle count.
- To keep the tub clean, it is recommended to run Tub Clean on a regular basis.

Built-in sink

1. Open the door, and use a cloth or sponge to clean the Built-in sink.
2. Press Water Jet to supply water to the board. Use this water to rinse the board.

WA8700K(HEATER)_03520W-00_EN.indd 34 2017-01-24 7:57:55

Magic filter

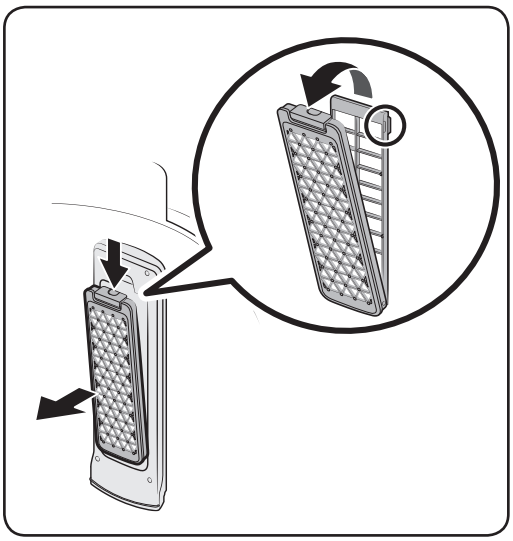

1. Press down the upper area of the filter case to remove.

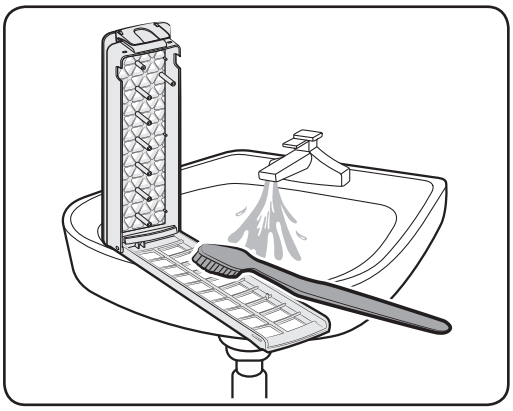

2. Unlock the cover, and clean the filter with running water and a brush.

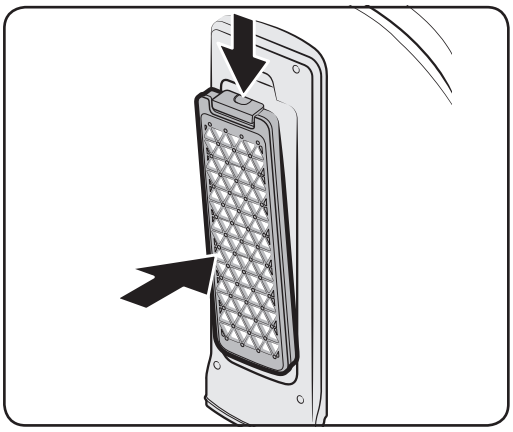

3. When cleaning is complete, close the cover and reinsert the filter case to the original position. You will hear a clicking sound when the filter case fits in.

WA8700K(HEATER)_03520W-00_EN.indd 35 2017-01-24 7:57:55

Maintenance

Pump filter (applicable models only)

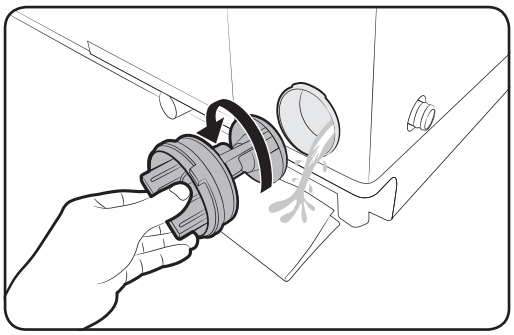

1. Put a floor-cloth or towel under the Pump filter. Turn the filter knob anticlockwise to remove.

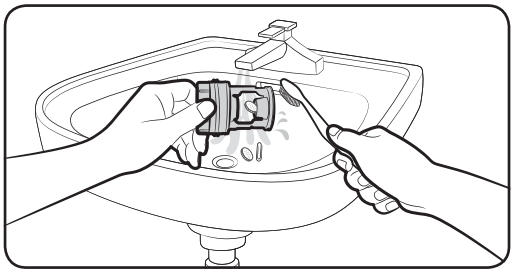

2. Clean the filter with running water and a soft brush.

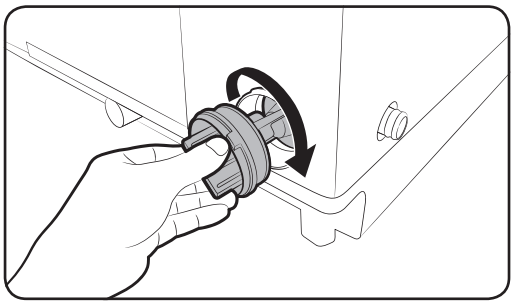

3. Reinsert the filter, and turn clockwise until it locks into position.

WA8700K(HEATER)_03520W-00_EN.indd 36 2017-01-24 7:57:55

Mesh filter

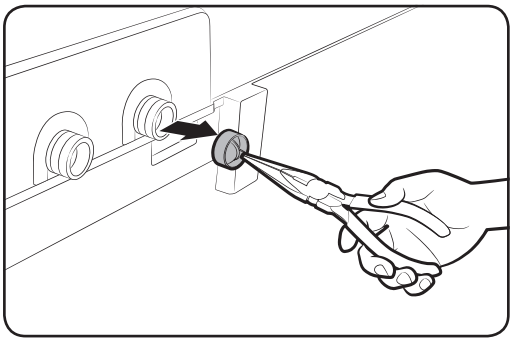

1. Use pliers to pull out the mesh filter from inside the water inlet as shown.
2. Use a soft brush to clean the mesh filter with running water.

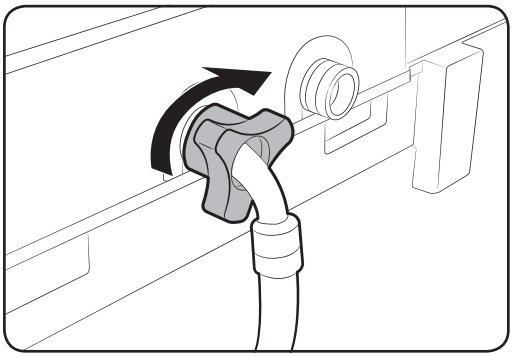

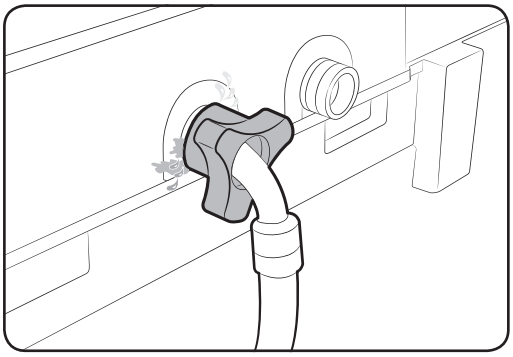

3. Reinsert the filter. Make sure it is tightened against water leaks.

WA8700K(HEATER)_03520W-00_EN.indd 37 2017-01-24 7:57:56

Maintenance

Detergent drawer

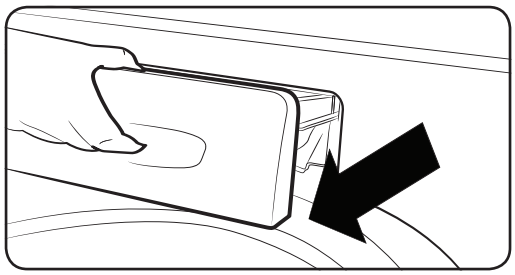

1. Fully pull out the detergent drawer.

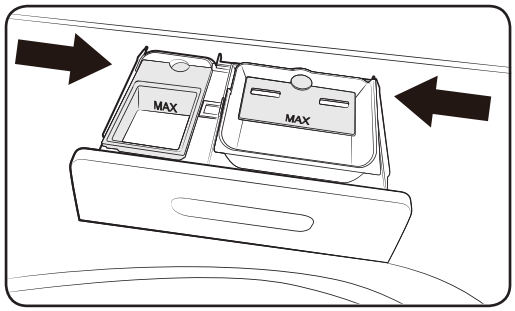

2. To remove, pull the detergent drawer while pushing the ends of each side.

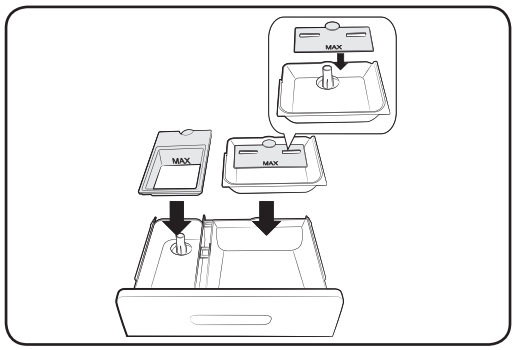

3. Remove the inserts from the compartments. Rinse the inserts and the drawer in warm water and clean with a soft brush.

WA8700K(HEATER)_03520W-00_EN.indd 38 2017-01-24 7:57:56

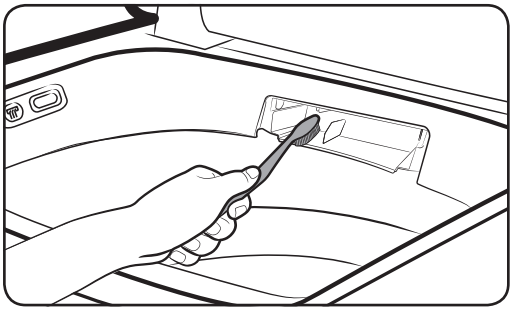

4. Clean the drawer opening thoroughly with a small, non-metallic brush.

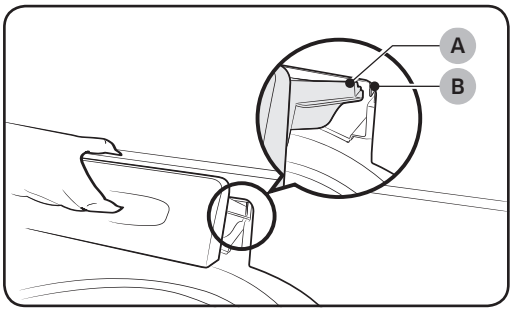

5. Return the insert to the proper compartments. Replace the drawer by placing the **drawer rail (A)** on the **compartment rail (B)** while tilting the drawer downward.
6. Fully push the drawer back to close.

WA8700K(HEATER)_03520W-00_EN.indd 39 2017-01-24 7:57:56

Troubleshooting

Checkpoints

If you encounter a problem with the washing machine, first check the table below and try the suggestions.

Problem	Action
Does not turn on.	• Make sure you use rated power for the product. • Make sure the power cord is completely plugged in. • Check the fuse or reset the circuit breaker.
Does not start.	• Make sure the door is closed. • Make sure the water taps are open. • Make sure to press or tap **START/PAUSE** to start the washing machine. • Make sure Child Lock is not activated. • Before the washing machine starts to fill, it will make a series of clicking noises to check the door lock and does a quick drain. • Was the door opened during the spinning cycle? Close the door, and press or tap **START/PAUSE** to resume. • The machine enters Standby or is in a soaking cycle. Please wait. • Check the fuse or reset the circuit breaker.
Water is not supplied.	• Make sure you press or tap **START/PAUSE** after selecting the water supply. • Make sure the water taps are open. • Is the filter net at the water supply hose connector clogged? Clean the filter net by brushing with a toothbrush. • Is the water supply cut off? If the water supply is cut off, close the tap and power off. • Straighten the water supply hoses. • Open and close the door, then press or tap **START/PAUSE**. • If the water pressure is low, it takes longer to start washing. • If the water level is not as high as necessary or lower than expected, use the level selector to adjust the water level.
After a cycle, detergent remains in the automatic dispenser.	• Make sure the washing machine is running with sufficient water pressure. • Make sure the detergent drawer is properly inserted. • Remove and clean the detergent drawer, and then try again.

WA8700K(HEATER)_03520W-00_EN.indd 40 2017-01-24 7:57:56

Problem	Action
Vibrates excessively or makes noise.	• Make sure the washing machine is set on a level floor. If the floor is not level, use the levelling feet to adjust the washing machine. • Make sure the washing machine is not contacting any other object. • Make sure the laundry load is balanced. • Make sure the laundry is spread evenly in the washing machine. Spread out the laundry evenly and start again. • Make sure the space around the washing machine is free of objects. • Humming is produced normally during operation. • Objects such as coins can cause noise. Remove these objects from the washing machine after washing is complete.
Stops.	• Plug the power cord into a live electrical outlet. • Check the fuse or reset the circuit breaker. • Close the door, and press or tap **START/PAUSE** to start the washing machine. For your safety, the washing machine will not spin unless the door is closed. • Before the washing machine starts to fill, it will make a series of clicking noises to check the door lock and does a quick drain. • There may be a pause or soak period in the cycle. Wait briefly and the washing machine may start. • Make sure the inlet hose screens at the taps are not clogged. Periodically clean the screens. • This problem occurs temporarily due to low voltages, and will be solved when power recovers.
The Tub Clean alarm does not turn off.	• When the machine is diagnosed to be cleaned, the indicator blinks for an hour. This recurs 6 consecutive times until you run the Tub Clean cycle. This is normal, and not a system failure. To keep the tub clean, it is recommended to run the cycle once every 1-3 months.

WA8700K(HEATER)_03520W-00_EN.indd 41 2017-01-24 7:57:56

Troubleshooting

Problem	Action
Fills with the wrong temperature water.	• Fully open both water taps. • Make sure the temperature selection is correct. • Make sure the hoses are connected to the correct water taps. Flush water lines. • Disconnect the hoses and clean the screens. The hose filter screens may be clogged. • While the washing machine fills, the water temperature may change as the automatic temperature control feature checks incoming water temperature. This is normal. • While the washing machine fills, you may notice just hot and/or just cold water going through the dispenser when cold or warm temperatures are selected. This is a normal function of the automatic temperature control feature as the washing machine determines the water temperature.
Door (Lid) locked or will not open.	• While the washing machine is operating, press or tap **START/PAUSE** to stop the washing machine. • It may take a few moments for the door lock mechanism to disengage.
Does not drain and/or spin.	• Check the fuse or reset the circuit breaker. • Make sure the electrical voltage is normal. • Make sure the washing machine is plugged in. • Make sure the drain hose is pointed downward. (Natural drain models only) • Make sure the drain hose is not clogged. • Make sure the drain hose is not kinked. • Straighten the drain hose. If there is a drain restriction, call for service. • Close the door, and press or tap **START/PAUSE**. For your safety, the washing machine will not spin unless the door is closed.
Load is wet at the end of the cycle.	• Use the High or Extra High spin speed. (Applicable model only) • Use high efficiency (HE) detergent to reduce oversudsing. • Load is too small. Small loads (one or two items) may become unbalanced and not spin completely.

WA8700K(HEATER)_03520W-00_EN.indd 42 2017-01-24 7:57:56

Problem	Action
Leaks water.	• Make sure all hose connections are tight. • Make sure the water supply hose's rubber packing is in the correct position. Screw tightly again. • Make sure the end of the drain hose is correctly inserted and secured to the drain system. • Avoid overloading. • Use high efficiency (HE) detergent to prevent oversudsing. • Make sure the water supply hose is not kinked. • If the water supply is too strong, water may leak. Close the water tap a little. • Make sure water is not leaking from the water tap. If so, repair the water tap.
Excessive suds.	• Use high efficiency (HE) detergent to prevent oversudsing. • Reduce the detergent amount for soft water, small loads, or lightly soiled loads. • Non-HE detergent is not recommended.
The spin basket or drain/supply hose is frozen.	• Use warm water to disconnect the water supply hose and drain hose. Soak them in warm water. • Fill the spin basket with warm water, and then wait for about 10 minutes. • Put a hot towel on the drain hose connector. • Reconnect the water supply hose and drain hose, and check if water is supplied properly.
Water drains out immediately.	• Make sure the drain hose is not clogged, and is hung over the drain hose hook. Fill the spin basket halfway with water, and try spinning again. • Lift the end of the drain hose to prevent water from draining. Fill the spin basket halfway with water, and then run spinning after releasing the drain hose. • Make sure the drain hose is installed correctly. See the installation section of this user manual and adjust the position of the drain hose as instructed.
Stains on clothes.	• Clean the magic filter.
Has odors.	• Excessive suds collect in recesses and can cause foul odors. • Run cleansing cycles to sanitize periodically. • Dry the washing machine interior after a cycle has finished.

If a problem persists, contact a local Samsung service center.

WA8700K(HEATER)_03520W-00_EN.indd 43 2017-01-24 7:57:56

Troubleshooting

Information codes

If the washing machine fails to operate, you may see an information code on the display. Check the table below and try the suggestions.

Code	Action
1C	The WaterLevel sensor is not working properly. • Check WaterLevel Sensor wire harness. • If the information code remains, contact a customer service center. **NOTE** When the washing machine displays "**1C**", the washing machine drains for 3 minutes and the **POWER** button is inoperative during this time.
3C	Check the motor for operation. • Try restarting the cycle. • If the problem continues, call for service.
4C	Water is not supplied. • Make sure the water taps are open. • Make sure the water hoses are not clogged. • Make sure the water taps are not frozen. • Make sure the washing machine is operating with sufficient water pressure. • Make sure that the cold water tap and the hot water tap are properly connected. • Clean the mesh filter as it may be clogged. **NOTE** When the washing machine displays "**4C**", the washing machine drains for 3 minutes and the **POWER** button is inoperative during this time.
4C2	• Make sure the cold water supply hose is firmly connected to the cold water tap. If it is connected to the hot water tap, the laundry may be deformed with some cycles.

WA8700K(HEATER)_03520W-00_EN.indd 44 2017-01-24 7:57:56

Code	Action
5C	Water is not draining. • Make sure the drain hose is not frozen or clogged. • Make sure the drain hose is positioned correctly, depending on the connection type. • Clean the debris filter as it may be clogged. • Make sure the drain hose is straightened all the way to the drain system. • If the information code remains, contact a customer service center.
9C1	The electronic control needs to be checked (Over Voltage Error). • Check the PCB and wire harness. • Check if power is supplied properly. • If the information code remains, contact a customer service center.
9C2	Low voltage detected • Check if the power cord is plugged in. • If the information code remains, contact a customer service center.
AC6	Inverter Communication problem • Check the Inverter PCB and wire harness. • If the information code remains, contact a customer service center.
dC	Operating the washing machine with the door open. • Make sure the door is properly closed. • Make sure laundry is not caught in the door.
HC	High temperature heating check. • If the information code remains, contact a customer service center.

WA8700K(HEATER)_03520W-00_EN.indd 45 2017-01-24 7:57:56

Troubleshooting

Code	Action
LC	Check the drain hose. • Make sure the end of the drain hose is placed on the floor. • Make sure the drain hose is not clogged. • If the information code remains, contact a customer service center. **NOTE** When the washing machine displays “**LC**”, the washing machine drains for 3 minutes and the **POWER** button is inoperative during this time.
OC	Water is overflowed. • Restart after spinning. • If the information code remains on the display, contact a local Samsung service center.
PC	When position of the clutch can't be detected. • If the information code remains, contact a customer service center.
PC1	After position of the clutch is detected, if the signal of the clutch hall goes wrong. • If the information code remains, contact a customer service center.
Ub	Spinning does not work. • Make sure laundry is spread out evenly. • Make sure the washing machine is on a flat, stable surface. • Redistribute the load. If only one item of clothing needs washing, such as a bathrobe or pair of jeans, the final spin result might be unsatisfactory, and an “Ub” check message will be shown in the display.
Ur	Display for additional rinsing. • Show additional rinsing is sensing unbalance. • Method of releasing the display. • Any key input.

If any information code keeps appearing on the screen, contact a local Samsung service center.

WA8700K(HEATER)_03520W-00_EN.indd 46 2017-01-24 7:57:56

Specifications

Specification sheet

Type	Top loading washing machine
	WA13M8700**
Capacity (kg)	13.0
Power consumption (W)	1400 - 1650
Dimensions (mm)	W 686 x D 744 x H 1077
Net weight (kg)	65.0
Water pressure (MPa (kg·f/cm^2))	0.05 - 0.78 (0.5 - 8.0)
Spin speed (rpm)	800

NOTE

- Asterisk (*) means variant model and can be varied (0-9) or (A-Z).
- The design and specifications are subject to change without notice for quality improvement purposes.

WA8700K(HEATER)_03520W-00_EN.indd 47 2017-01-24 7:57:56

SAMSUNG

QUESTIONS OR COMMENTS?

COUNTRY	CALL	OR VISIT US ONLINE AT
AUSTRALIA	1300 362 603	www.samsung.com/au/support

DC68-03520W-00