HONDA MPE

POWER EQUIPMENT

UMK425
OWNER'S MANUAL

INTRODUCTION

Thank you for purchasing a Honda Mpe grass/weed trimmer.

This manual covers the operation and maintenance of the HONDA MPE GRASS/WEED TRIMMER UMK425.

Honda MPE.Pty.Ltd.reserves the right to make changes at any time without notice and without incurring any obligation.

No part of this publication may be reproduced without written permission.

This manual should be considered a permanent part of the grass/weed trimmer and should remain with it if it is resold.

Pay special attention to statements preceded by the following words;

⚠WARNING Indicates a strong possibility of severe personal injury or death if instructions are not followed.

CAUTION : Indicates a possibility of personal injury or equipment damage if instructions are not followed.

NOTE : Gives helpful information.

If a problem should arise, or if you have any questions about the grass/weed trimmer, consult an authorized Honda dealer.

Honda grass/weed trimmers are designed to give safe and dependable service if operated according to instructions.

⚠WARNING Operating a grass/weed trimmer requires special effort to ensure the safety of the operator and the safety of others. Read and understand this Owner's Manual before operating the grass/weed trimmer; failure to do so could result in personal injury or equipment damage.

HONDA MPE Pty. Ltd. 2002, ALL RIGHTS RESERVED

- **The illustrations may vary according to the type.**

CONTENTS

1. SAFETY INSTRUCTIONS 3
2. SAFETY LABEL LOCATIONS 14
3. COMPONENT IDENTIFICATION 15
4. CONTROLS 17
5. PRE-OPERATION CHECKS 21
6. STARTING THE ENGINE 32
7. TRIMMING OPERATION 36
8. STOPPING THE ENGINE 39
9. MAINTENANCE 40
10. STORAGE 55
11. TROUBLESHOOTING 57
12. SPECIFICATIONS 58

Illustrations in this manual are for instructional purposes only and may not be true representations. All information contained in this manual is based on the latest product information available at the time of printing. Honda Australia Motorcycle and Power Equipment Pty. Ltd. reserve the right to make changes at any time without notice. No part of this publication may be reproduced, stored in a retrieval system, or transmitted, in any form by any means, electronic, mechanical, photocopying, recording, or otherwise, without the prior written permission of Honda Australia Motorcycle and Power Equipment Pty. Ltd. This includes text, figures and tables.

Honda Australia Motorcycle and Power Equipment Pty. Ltd.

ABN 96 006 662 862(trading as Honda MPE).

⚠WARNING

To ensure safe operation

For your safety and safety of others, pay special attention to these precautions:

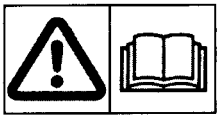

- **Honda grass/weed trimmer is designed to give safe and dependable service if operated according to instructions. Read and understand the Owner's Manual before operating the grass/weed trimmer. Failure to do so could result in personal injury or equipment damage.**

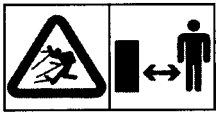

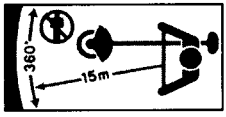

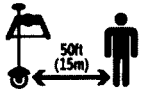

- **Keep all persons and pets away from the grass/weed trimmer operating area.**
- **To prevent accidental contacts with the wheeling cutting attachment (nylon-line cutting head or cutting blade) or thrown objects from the wheeling cutting attachment, keep people and pets at least 15m (50 ft.) away from the grass/weed trimmer when it is in use.**

- **Wear eye protection, helmet and other protective devices to protect your eyes and body from all objects (gravel, glass, wire, etc.) thrown by the wheeling cutting attachment.**

⚠WARNING

To ensure safe operation

Operator Responsibility

- Any part from the machine is a potential source of danger if the machine is used in abnormal conditions or if the maintenance is not done correctly.
- Read the owner's manual carefully. Be familiar with the controls and their proper use of the grass/weed trimmer. Know how to stop the engine rapidly and how to unhook a harnessed grass/weed trimmer quickly.
- Use the grass/weed trimmer for the purpose it is intended for, that is trimming.
  Any other use could be dangerous or damage the grass/weed trimmer.
  Do not use the grass/weed trimmer as a pruning hook.
- Never allow children or people unfamiliar with this owner's manual to use the grass/weed trimmer. Local regulations may restrict the age of the operator.
- If you lend or resell your grass/weed trimmer to a third person, instruct him or her with how to handle the product and alert him or her to read the Owner's Manual carefully before operation.
- Never operate the grass/weed trimmer while:
  — people, especially children or pets are nearby.
  — user is fatigued or under medication, or has swallowed substances known to affect judgement or reactions.
- Keep people and pets at least 15m (50 ft.) away from the operator during operation. Note that an assistant to the operator should work at least 15 m (50 ft.) away from the operator, too. We recommend to decide the engine stop signal and other signals between the operator and assistant, and use them for safety during operation.
- Keep in mind that the operator or user is responsible for accidents or hazards occurring to other people or their property.

⚠WARNING

To ensure safe operation

Operator Responsibility

- While operating the grass/weed trimmer, always wear following protective clothing and protective devices.
  - — Protective clothing
    Wear adequate clothes with long sleeves and long pants.
    The clothes must fit your body and button up or zip up the clothes securely. Do not leave the sleeves and bottom of the shirt/jacket loose. Wear the arm covers, too.
    Do not wear the clothes with the tapes, laces and/or ribbons, loose clothes, necktie, necklace, etc. during operation. They can be caught in the grass/weed trimmer or on the weed causing injury. Bind your hair if it is long, and do not let your hair below your shoulder.
  - — Protective devices
    - * Goggles
      Wear the goggles or other eye protection to protect your eyes from the debris that is thrown by the wheeling cutting attachment (nylonline cutting head or cutting blade).
    - * Helmet
      Wear the helmet to protect your head from the overhead branches and the falling foreign material.
    - * Face shield
      Wear face shield to protect your face from the debris thrown by the wheeling cutting attachment.
    - * Ear muffs/ear plugs
      Wear the ear muff, ear plugs or other hearing protection to protect your ears from the noise.
    - * Gloves
      Wear the gloves to protect your hands.

⚠WARNING

To ensure safe operation

Operator Responsibility

* Safety boots
  Wear the safety boots with the non-slip sole and toe protector to protect your feet from the flying debris.
  Do not operate the equipment when barefoot or wearing open sandals.
  Wear the leg protectors as well.
* Dust mask
  We recommend that you wear the dust mask if you suffer from the allergic rhinitis, e.g. pollinosis, etc. The dust mask is available at a pharmacy and it is helpful for reducing the amount of pollens you breathe.

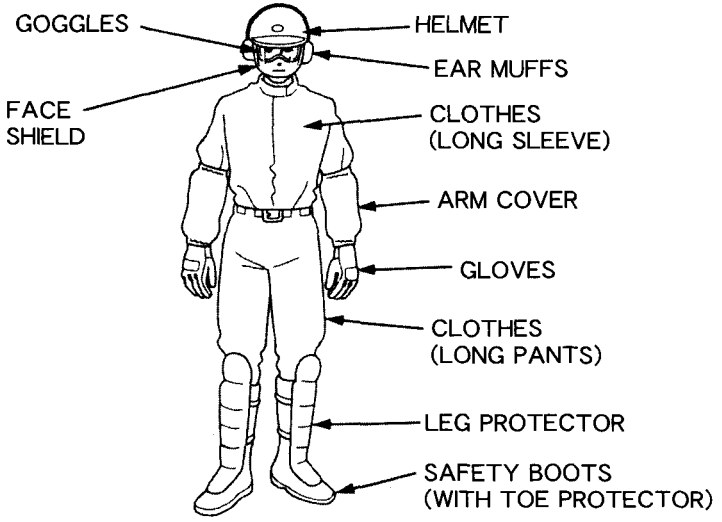

- Before each use, visually inspect the grass/weed trimmer including a cutting attachment for any damage and looseness of fastening part.
- Avoid operating the grass/weed trimmer at night or in a bad weather of poor visibility, because there is much possibility of accident.
- Walk, never run during operation.
- Avoid operating the grass/weed trimmer on a steep slope.
  The steep slope is very slippery, so you can slip down.

⚠WARNING

To ensure safe operation

Operator Responsibility

- Do not operate the grass/weed trimmer with the debris shield, labels, and other parts removed.
  Note that the debris shield is provided for protection of the operator from the debris that are thrown from the wheeling cutting attachment (nylon-line cutting head or cutting blade). Never operate the grass/weed trimmer with the debris shield removed or before installing the debris shield in the proper position securely.
- Do not mount an incorrect part and do not tamper with the grass/weed trimmer as it can result in personal injury and/or equipment damage. Use the cutting attachment that is designated for your model and application.
- Do not change the engine governor settings or overspeed the engine.
- Before cranking the engine, be sure to check the cutting attachment cannot come into contact with the ground or any obstruction.
- Start the engine carefully according to instructions and with hands and feet well away from the cutting attachment.
- Start the grass/weed trimmer on a level surface, free of high grass or obstacle.
- Do not raise the cutting attachment above your knee height during operation. You can be hit by the debris thrown by the wheeling cutting attachment in your eyes and face causing injury.
- Never carry the grass/weed trimmer while the cutting attachment is turning. Before you carry the grass/weed trimmer, be sure to stop the engine and confirm the cutting attachment stops its turning. If a cutting or saw blade is used, cover the blade with the protective plastic cover while carrying the trimmer.

⚠WARNING

To ensure safe operation

Operator Responsibility

- Stop the engine and disconnect the spark plug cap in the following cases:
  - — Before any operation around the cutting attachment (nylon-line cutting head or cutting blade).
  - — Before checking, cleaning or working on the grass/weed trimmer.
  - — After striking a foreign object. Inspect the grass/weed trimmer for damage and make repairs before restarting and operating the grass/weed trimmer again.
  - — If grass/weed trimmer starts to vibrate abnormally. Check immediately the cause of the vibration and perform the necessary repair.
- Stop the engine in the following caces:
  - — Whenever you leave the grass/weed trimmer unattended.
  - — Before refuelling.
  - — When any person or pet is approaching.
  - — Shut off the engine immediately when the grass/weed trimmer shows abnormal vibration suddenly. Sudden vibration can suggest the damaged rotating parts or loose fasteners. Examine the cause of the problem, and do not start the engine before repair is made.
  - — When wires catch on the wheeling cutting attachment and flap around. Remove the wires after the cutting attachment has stopped turning.
  - — Before placing the grass/weed trimmer on the ground, make sure the cutting attachment stops turning as well.
    Note that the cutting attachment is turning by inertia right after returning the throttle trigger and while the engine is idling.
- The grass/weed trimmer is faulty when the engine is idling by returning the throttle but the cutting attachment keeps turning, and idle speed adjustment must be made. Consult your authorized Honda dealer.
- Keep all nuts, bolts and screws tight to be sure the grass/weed trimmer is in safe working condition. Regular maintenance is an essential aid to user's safety and retaining a high level of performance.
- Do not use the grass/weed trimmer with worn or damaged parts. Parts must be replaced, or repaired. Replace worn or damaged parts with HONDA genuine parts. Non equivalent quality parts may damage the machine and be prejudicial to your safety.

⚠WARNING

To ensure safe operation

Operator Responsibility

- Adjust the holding position of your grass/weed trimmer.
  Be sure to adjust the holding position with the engine stopped. Adjust the carrying harness so that the quick-release latch is positioned at your right hip. Hook the grass/weed trimmer to the carrying harness. Adjust the carrying harness length so that the cutting attachment is parallel to the ground and stays above the ground keeping the clearance specified below.
  Note that it might be hard to hold the grass/weed trimmer in the correct position if you are very tall. Do not operate the grass/weed trimmer if the cutting attachment is close to your feet when you hold the grass/weed trimmer at the correct position.
- Check the balance of the grass/weed trimmer between its front and rear sides for proper control and less fatigue.
  Hold the grass/weed trimmer at the correct position as described above.
  Slacken your grip on the handle gradually. Do not release but put your hands lightly on the handle and check that the cutting attachment-to-ground clearance does not change large this time.
  Balancing adjustment is necessary if the cutting attachment rises above your knees. Do not operate the grass/weed trimmer without the balancing adjustment.

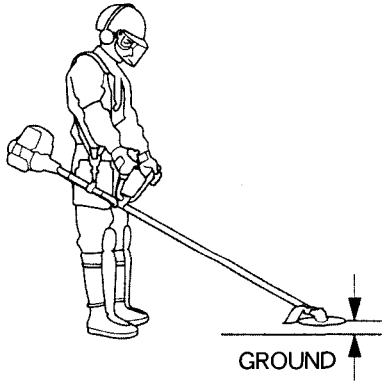

Parallel to the ground and 0-30 cm (0-11.8 in.) for the nylon-line cutting head and 10-30 cm (3.9-11.8 in.)for the cutting blade clear of the ground.

- Hold the grass/weed trimmer firmly with your both hands during operation to keep the trimmer under control at all times.

⚠WARNING

To ensure safe operation

Operator Responsibility

- Injury caused by vibration and cold:
  You may feel the prickling or burning pain in your fingers, and the fingers may lose color and feeling depending on your constitution. It is believed that these symptoms are brought by vibration and/or exposure to cold. The specific trigger point of these symptoms are not identified yet, but observe the following instructions.
  * Limit the amount of time you spend operating the grass/weed trimmer in a day.
    A day's work should consist of the work with the grass/weed trimmer and the other work without the hand-held equipment so you can limit the amount of time when your hands are exposed to the machine vibration.
  * Keep your body warm, especially your hands, wrists and arms.
  * Take your breaks at shorter intervals and arm exercises well to maintain good blood circulation. Do not smoke while working.
  * When you feel discomfort, redness and swelling of the fingers followed by whitening and loss of feeling, consult your doctor promptly.
- Injury caused by repeated operation:
  Performing the repeated operation for a prolonged time may cause injury. Observe the following instructions to reduce the causes of the injury.
  * Avoid the repeated operation by using your wrist(s) in bent, stretched or twisted position.
  * Take your breaks regularly to minimize the effect of the repeated operation. Take your time when performing the repeated operation. Do not rush to operate the grass/weed trimmer.
  * When your fingers, hands, wrists and/or arms are throbbing or numbed, consult your doctor.

⚠WARNING

To ensure safe operation

Child Safety

- Keep children indoors and supervised at all times any outdoor power grass/weed trimmer is being used nearby. Young children move quickly and are attracted especially to the grass/weed trimmer and trimming activity.
- Never assume children will remain where you last saw them. Be alert and turn the grass/weed trimmer off if children enter the area.
- Children should never be allowed to operate the grass/weed trimmer, even under adult supervision.

Thrown Object Hazard

Objects hit by the wheeling cutting attachment (nylon-line cutting head or cutting blade) can be thrown from the grass/weed trimmer with great force, and may cause serious injury.

- Thoroughly inspect the area where the grass/weed trimmer is to be used and remove all objects (stones, branches, wires, bones, etc...) which may be thrown by the wheeling cutting attachment.

⚠WARNING

To ensure safe operation

Fire and Burn Hazard

Gasoline is extremely flammable, and gasoline vapor can explode.
Use extreme care when handling gasoline. Keep gasoline out of reach of children.

- Store fuel in containers specifically designed for this purpose.
- Refuel outdoors only, and do not smoke while refuelling or handling fuel.
- Add fuel before starting the enging. Never remove the cap of the fuel tank or add petrol while the engine is running or when the engine is hot.
- If gasoline is spilled, do not attempt to start the engine but move the grass/weed trimmer away from the area of spillage and avoid creating any source of ignition until gasoline vapours have dissipated.
- Tighten all fuel tanks and container caps securely.
- When you start the engine after refueling, be sure to start the engine at least 3 m (3.2 ft.) away from the refueling spot.
- Never store the grass/weed trimmer with gasoline in the tank inside a building where fumes may reach an open flame, spark or high temperature source.
- Allow the engine to cool before storing in any enclosure.
- To reduce the fire hazard, keep the grass/weed trimmer, especially the engine, muffler, the gasoline storage area as well, free of grass, leaves, or excessive grease.
  Do not leave containers of vegetable matters in or near a building.
- If the fuel tank has to be drained, this should be done outdoors, with a cold engine.

⚠WARNING

To ensure safe operation

Carbon Monoxide Poisoning Hazard

Exhaust contains poisonous carbon monoxide, a colorless and odorless gas. Breathing exhaust can cause loss of consciousness and may lead to death.

- If you run the engine in an area that is confined or even partially enclosed, the air you breathe could contain a dangerous amount of exhaust gas. To keep exhaust gas from building up, provide adequate ventilation.
- Replace faulty muffler.
- Do not operate the engine in a confined space where dangerous carbon monoxide fumes can collect.

2. SAFETY LABEL LOCATIONS

Your grass/weed trimmer must be used with care. Therefore, decals have been placed on the machine, to remind you pictorially of main precautions to take during use. Their meanings are explained on page 3.

These decals are considered as a part of the grass/weed trimmer. Should one become detached or unreadable, contact your HONDA dealer for its replacement.

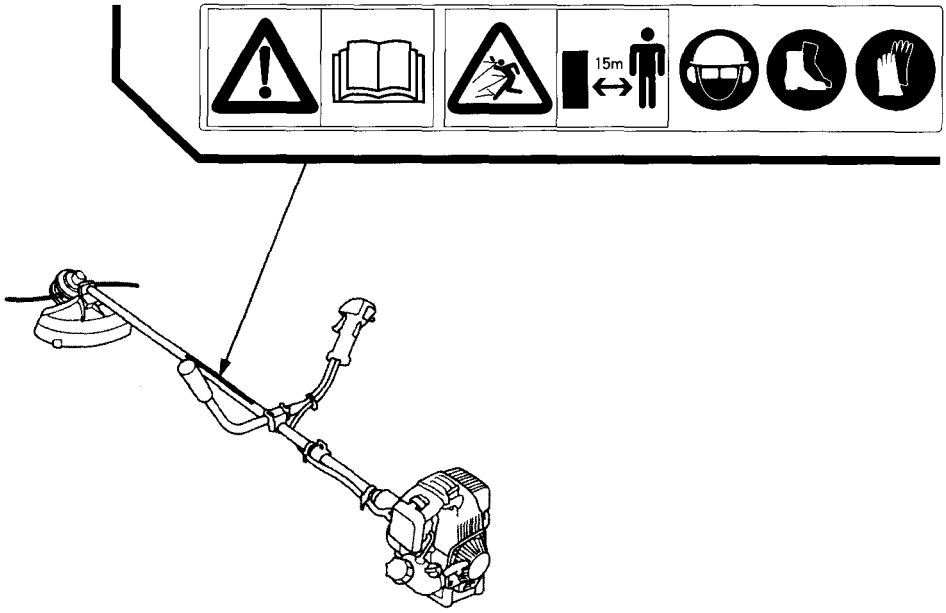

U4U:

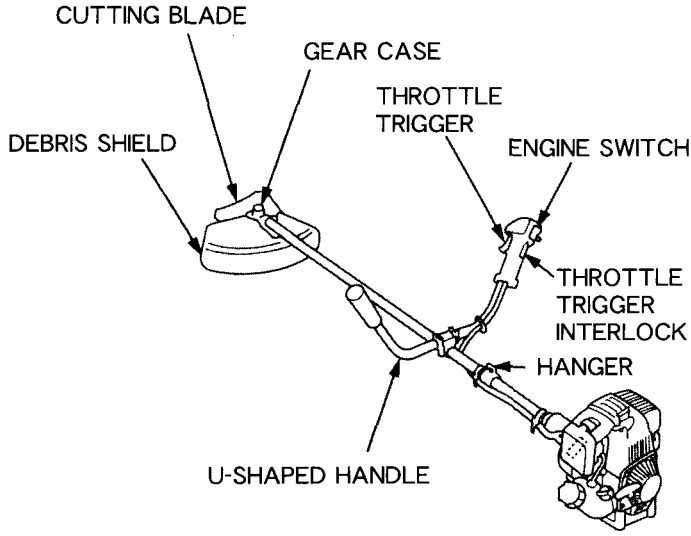
CUTTING BLADE
GEAR CASE
THROTTLE TRIGGER
DEBRIS SHIELD
ENGINE SWITCH
THROTTLE TRIGGER INTERLOCK
HANGER
U-SHAPED HANDLE

LNU:

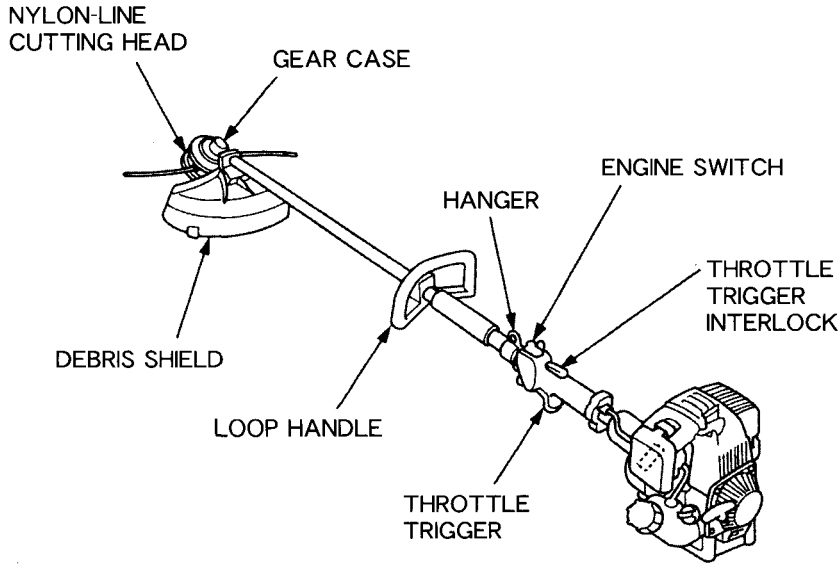
NYLON-LINE CUTTING HEAD
GEAR CASE
ENGINE SWITCH
HANGER
THROTTLE TRIGGER INTERLOCK
DEBRIS SHIELD
LOOP HANDLE
THROTTLE TRIGGER

ENGINE:

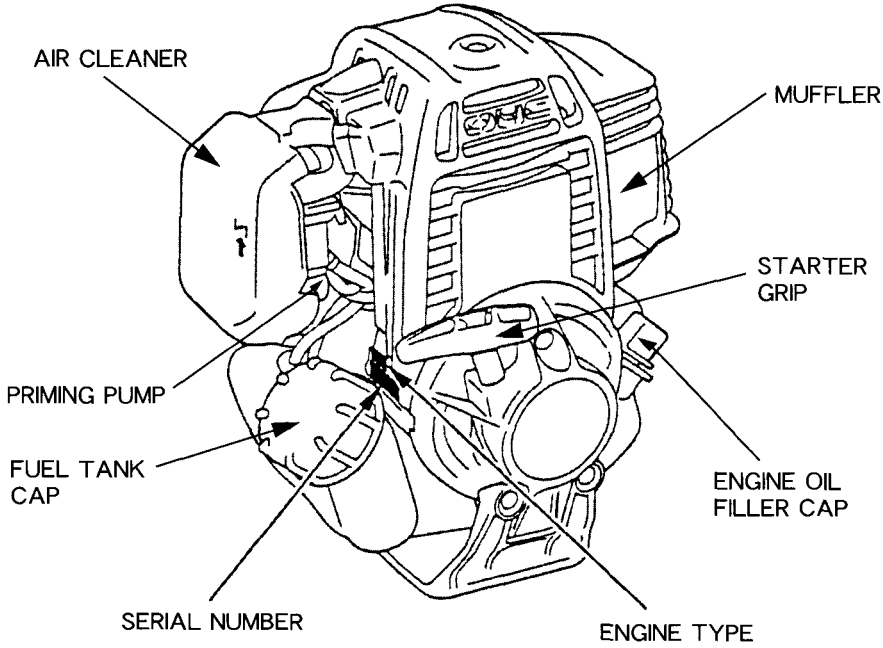
AIR CLEANER
MUFFLER
STARTER GRIP
PRIMING PUMP
FUEL TANK CAP
ENGINE OIL FILLER CAP
SERIAL NUMBER
ENGINE TYPE

1. Engine switch

The engine switch enables and disables the ignition system.

The engine switch must be in the ON position for the engine to run.

Turning the engine switch to the OFF position stops the engine.

Loop handle type:

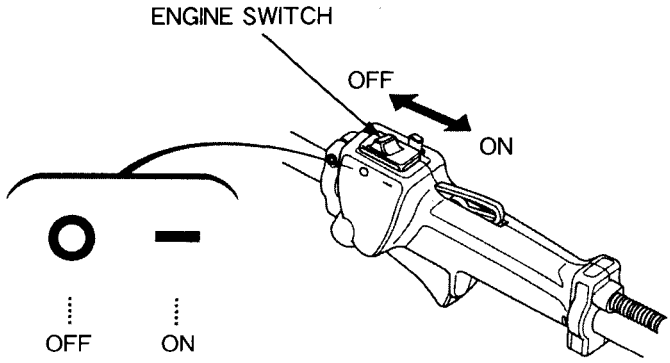

U-shaped handle type:

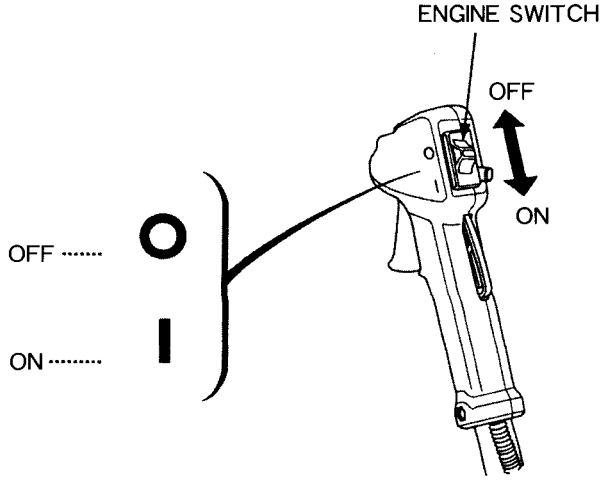

2. Choke lever

The choke lever opens and closes the choke valve in the carburetor.

The CLOSED position enriches the fuel mixture for starting a cold engine.

The OPEN position provides the correct fuel mixture for operation after starting, and for restarting a warm engine.

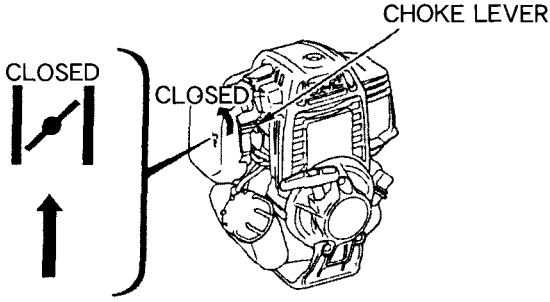

3. Starter grip

Puling the starter grip operates the recoil starter to crank the engine.

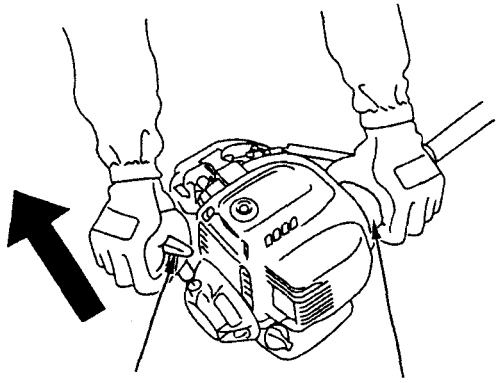

4. Throttle trigger

The throttle trigger controls engine speed.

Pulling and releasing the throttle trigger shown below makes the engine run faster or slower.

NOTE : The throttle trigger interlock must be depressed before the throttle trigger can be activated.

By pulling the throttle trigger gradually, the engine speed increases and the cutting attachment (nylon-line cutting head or cutting blade) starts to run.
Pull the throttle trigger more to accelerate the engine speed and the cutting rotating speed.

By releasing the throttle trigger, the engine speed decreases and the cutting attachment keeps turning for a while by inertia, then it stops.

Throttle trigger interlock:
The throttle trigger interlock makes the throttle trigger operable. The throttle trigger cannot be pulled unless the throttle trigger interlock has been pushed beforehand.

Idle-up knob:
When it is hard to start the engine, the idle-up knob helps the engine to start (see page 35).

Loop handle type:

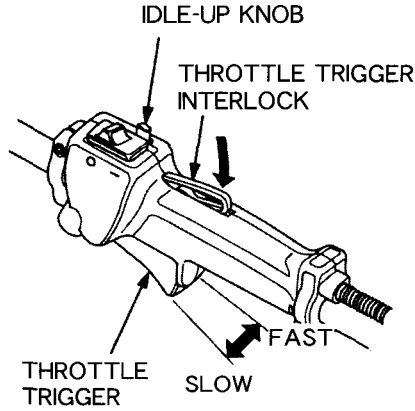

U-shaped handle type:

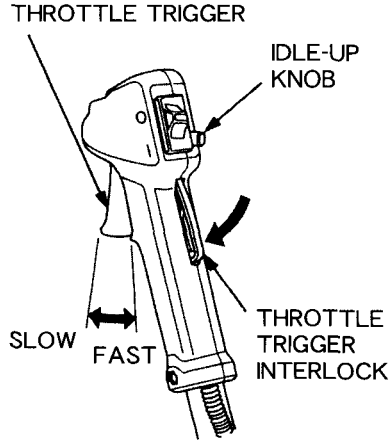

5. Quick-release latch

The quick-release latch tab is provided to detach the grass/weed trimmer from your body in an emergency.
Pull up the quick-release latch tab, and the grass/weed trimmer is detached from the carrying harness.

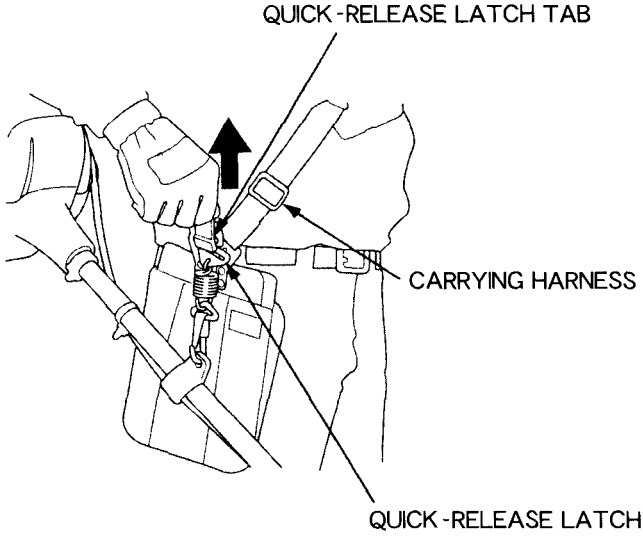

5. PRE-OPERATION CHECKS

For safe and efficient trimming, always make a pre-operation inspection before operating:

⚠WARNING Perform a pre-operation inspection on firm, level surface with the engine stopped and spark plug cap removed from the spark plug.

1. Check the engine oil level

CAUTION : Running the engine with low oil level will cause serious engine damage.

1. Place the grass/weed trimmer on a level surface and remove the oil filler cap.
2. Check the oil level : it should reach to the edge of the oil filler neck, and check the engine oil for contamination and deterioration.
3. If the oil level is low, fill to the edge of the oil -filler neck with the recommended oil.
   If the oil is contaminated or deteriorated, replace it (see page 43).
4. Install the oil filler cap.

Every 10 hours, check the engine oil level and replenish oil up to the top of the oil filler neck if the engine is operated for more than 10 hours continuously.

ENGINE OIL CAPACITY: 0.08ℓ (0.08US qt. 0.07 Imp qt)

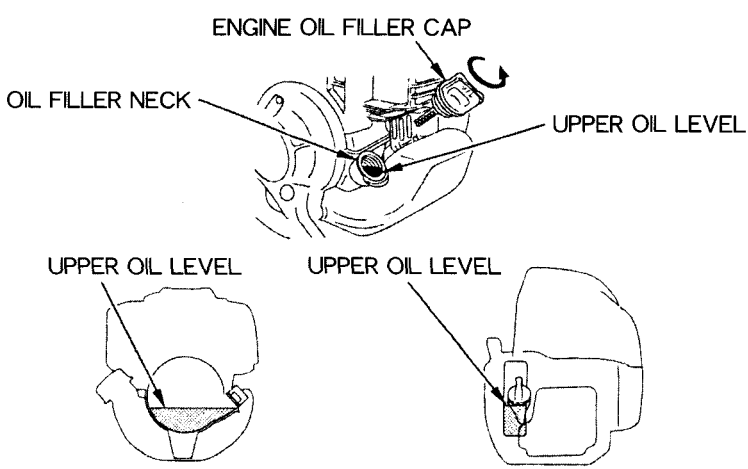

Use Honda 4-stroke, or an equivalent high detergent, premium quality motor oil certified to meet or exceed U. S. automobile manufacturer's requirements for service classification SG, SF. Motor oils classified SG, SF will show this designation on the container.
Select the appropriate viscosity for the average temperature in your area.

SAE Viscosity Grades

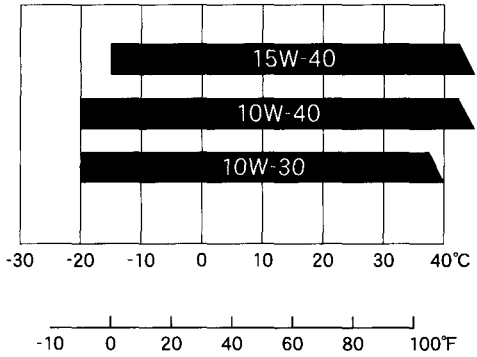

AMBIENT TEMPERATURE

CAUTION:
Using nondetergent oil or 2-stroke engine oil could shorten the engine's service life.

The recommended operating range of this engine is −5℃ to 40℃ (23°F to 104°F).

2. Check the fuel level

Use automotive gasoline (Unleaded or lowleaded is preferred to minimize combustion chamber deposits).

Never use an oil/gasoline mixture or dirty gasoline. Avoid getting dirt, dust or water in the fuel tank.

⚠WARNING

- **Gasoline is extremely flammable and is explosive under certain conditions.**
- **Refuel in a well-ventilated area with the engine stopped. Do not smoke or allow flames or sparks in the area where the engine is refueled or where gasoline is stored.**
- **Do not overfill the fuel tank (there should be no fuel in the filler neck). After refueling, make sure the tank cap is closed properly and securely.**
- **Be careful not to spill fuel when refueling. Spilled fuel or fuel vapor may ignite. If any fuel is spilled, make sure the area is dry before starting the engine.**
- **Avoid repeated or prolonged contact with skin or breathing of vapor. KEEP OUT OF REACH OF CHILDREN.**

CAUTION: Gasoline substitutes are not recommended; they may be harmful to fuel system components.

1. Check the fuel level visually from the outside of the fuel tank while keeping the fuel filler neck upright.
2. If the fuel level is low, refuel the fuel tank until the level as specified. Remove the fuel tank cap gradually to release a pressurized air in the fuel tank. Fuel in the fuel tank may spout out, if the fuel tank cap is removed quickly.

FUEL TANK CAPACITY. UMK425: 0.55 ℓ (0.145 OS gal, 0.121 Imp gal)

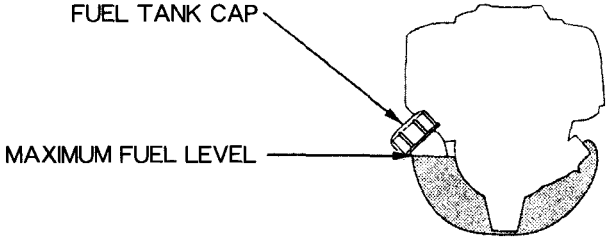

Gasolines containing alcohol

If you decide to use a gasoline containing alcohol (gasohol), be sure it's octane rating is at least as high as that recommended by Honda. There are two types of "gasohol": one containing ethanol, and the other containing methanol. Do not use gasohol that contains more than 10% ethanol. Do not use gasoline containing methanol (methyl or wood alcohol) that does not also contain cosolvents and corrosion inhibitors for methanol. Never use gasoline containing more than 5% methanol, even if it has cosolvents and corrosion inhibitors.

NOTE:

- Fuel system damage or engine performance problems resulting from the use of fuels that contain alcohol is not covered under the warranty.
  Honda cannot endorse the use of fuels containing methanol since evidence of their suitability is as yet incomplete.
- Before buying fuel from an unfamiliar station, try to find out if the fuel contains alcohol, if it does, confirm the type and percentage of alcohol used. If you notice any undersirable operating symptoms while using a gasoline that contains alcohol, or one thay you think contains alcohol, switch to a gasoline that you know does not contain alcohol.

3. Check the air cleaner elements

CAUTION : Never run the engine without the air cleaner; rapid engine wear will result.

1. Move the choke lever to the CLOSED (upwards) position.
2. Remove the air cleaner cover by unhooking the upper tab on the top of the air cleaner cover and its two lower tabs.
3. Check the air cleaner element for dirt or obstruction.
   Clean the air cleaner element, if it is dirty (see page 45).
4. Reinstall the air cleaner element.
5. Reinstall the air cleaner cover by inserting the lower tabs, then insert the upper tab.

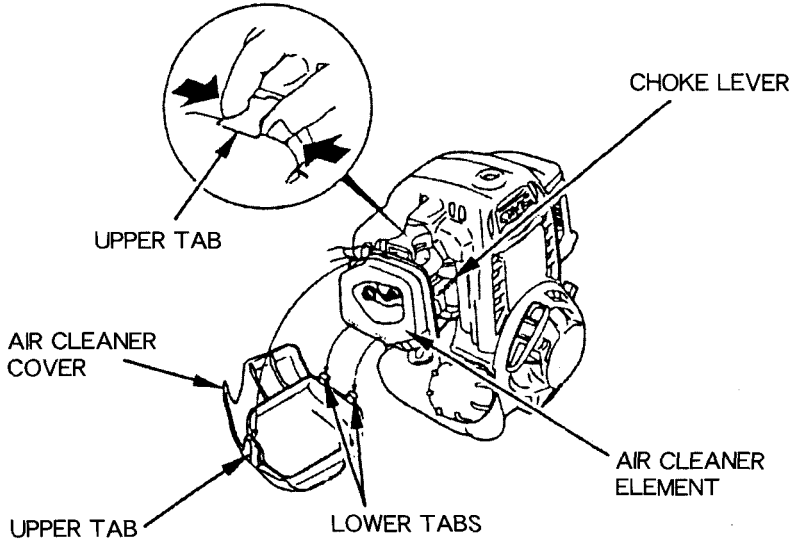

4. Check the throttle cable free play

- Check the throttle cable free play at the tip of the cable by pulling and releasing the throttle trigger a few times. It should be 1 – 3 mm (0.039 – 0.118 in.) at the tip of the throttle cable.

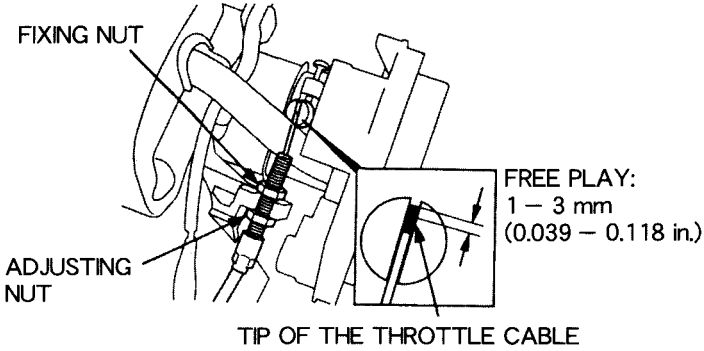

If the free play is not as specified above, adjust the free play (see page 51).

- Check the throttle trigger operates smoothly and always spring back to the idle position.

5. Check the quick-release latch

1. Put on the carrying harness.
2. Check the latch is released as soon as the quick-release latch tab is pulled upwards while holding the hip pad (U-shaped handle type only) with your left hand.
3. Insert the latch tongue in the slot of the quick-release latch to reattach the trimmer to the carrying harness.

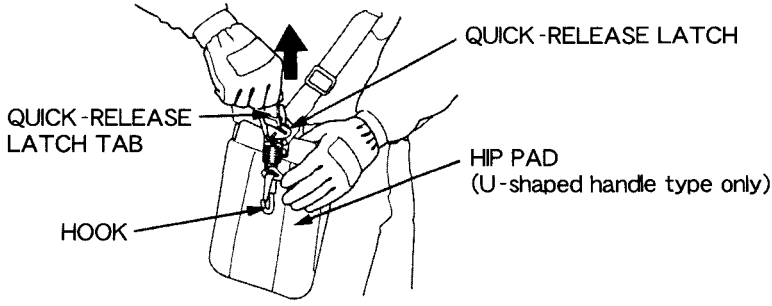

If the latch is not released, have your device inspected and repaired by your servicing dealer.

6. Inspect the cutting attachment

Nylon-line cutting head inspection:

⚠WARNING For safety, check the cutting head before starting the engine. Operating the grass/weed trimmer with the loose, cracked, or other damaged cutting head can cause a personal injury or equipment damage. Thrown cutting head by loose fastening can hit the operator or bystanders causing death or serious injury.

CAUTION: Wear heavy gloves to protect your hands, when you turn a spool.

1. Stop the engine and remove the spark plug cap.
2. Check the cutting head for looseness.
   Tighten the cutting head securely if it is loose (see page 46).
   If it is hard to do it yourself, consult your authorized Honda dealer.
3. Check the nylon line for fluffing.
   If the nylon line is damaged, have the nylon line advance according to the following procedures.

   Pull and turn a spool counterclockwise to the next notch so that the nylon line might advance.

Blade inspection:

⚠WARNING For safety, check the blade for wear and damage and check the tightness of the blade nut before starting the engine. Operating the grass/weed trimmer with a worn, cracked, or damaged blade can cause a personal injury or equipment damage. A worn, cracked or damaged blade can break and pieces of the damaged blade can hit the operator or bystanders causing death or serious injury.

CAUTION: Wear heavy gloves to protect your hands, when working around the blade.

1. Stop the engine and remove the spark plug cap.
2. Check the tightness of the blade nut.
   Tighten the nut if it is loose (see page 47).
   If it is hard to do it yourself, consult your authorized Honda dealer.
3. Check the blade for wear, bend, crack and other damage.
   If the blade is worn out, cracked, chipped, or otherwise damaged replace the damaged blade with new one which is a genuine Honda replacement blade or its equivalent (see page 47).

   A dull blade can be sharpened.
   If it is hard to do it yourself, consult your authorized Honda dealer.

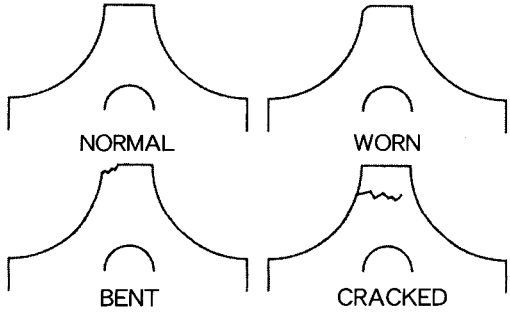

7. Inspect the debris shield

⚠WARNING

- **Never use the grass/weed trimmer without its debris shield. Stones or other foreign objects thrown outward by the wheeling cutting attachment (nylon-line cutting head or cutting blade) or contact with the wheeling cutting attachment could cause personal injury or property damage.**
- **Do not touch the line cut-off knife. Contact with it may hurt your fingers.**

1. Inspect the debris shield to be sure that they are correctly installed and are not damaged. If the debris shield is damaged, replace it before using the grass/weed trimmer.
2. Check the debris shield mounting bolts for looseness.
   Tighten the bolts securely, if necessary.

Cutting blade:

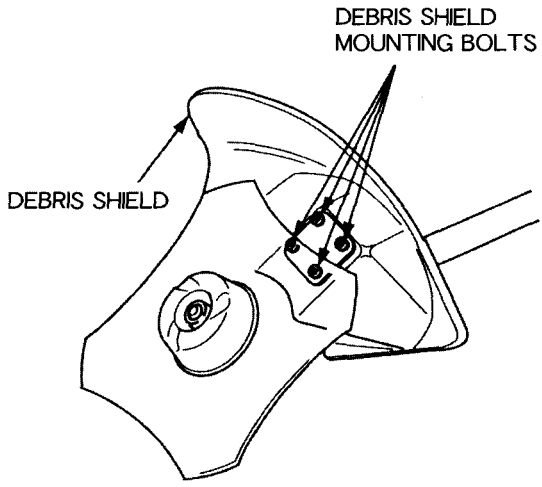

8. Check all bolts and nuts

1. Check each bolt and nut for looseness. Tighten them securely if necessary.
2. Check the handle for loose mounting bolts or screws, and tighten them securely if necessary.

6. STARTING THE ENGINE

⚠WARNING

- **Exhaust gas contains poisonous carbon monoxide. Never run the engine in an enclosed area. Be sure to provide adequate ventilation.**
- **Start the engine in a place away from the people, pets, and surrounding buildings. Be sure there are no obstacles in the working area.**

CAUTION : Do not start the engine with the grass/weed trimmer hanged from the carrying harness or raised in the air off the ground. The trimmer can make unexpected movement causing injury in your legs, etc.

NOTE : Place the grass/weed trimmer in an area free from the obstacles, and be sure the cutting attachment is not in contact with the ground and other materials.

1. Turn the engine switch to the ON position.

Loop handle type:

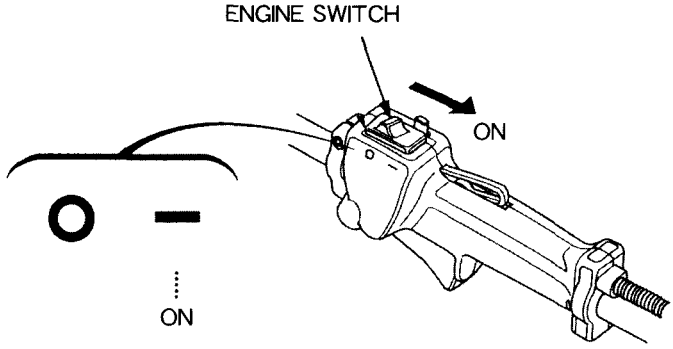

U-shaped handle type:

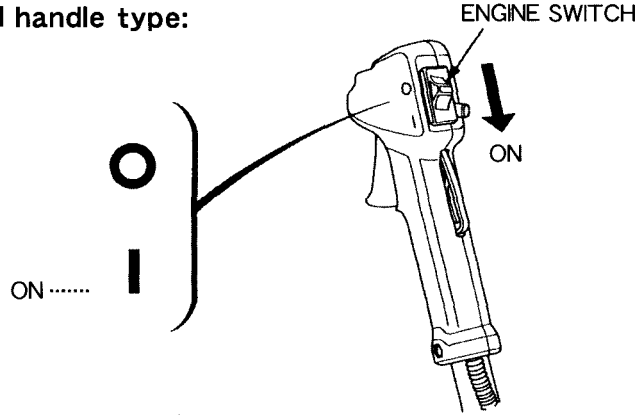

2. Move the choke lever to the CLOSED position.

NOTE
Do not use the choke if the engine is warm or the air temperature is high.

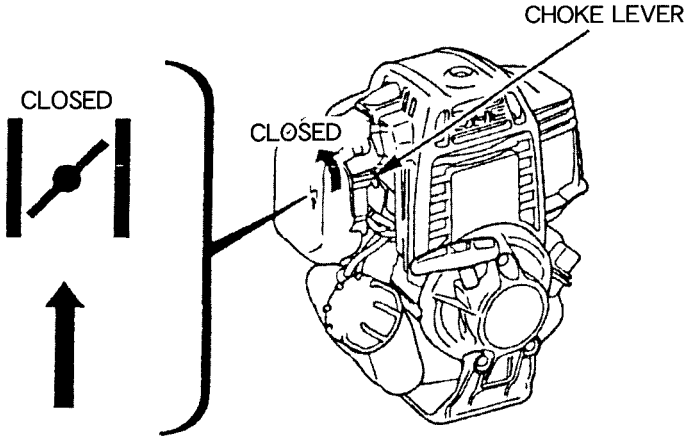

3. Press the priming pump several times until a fuel flow in the fuel return tube is visually noticed.

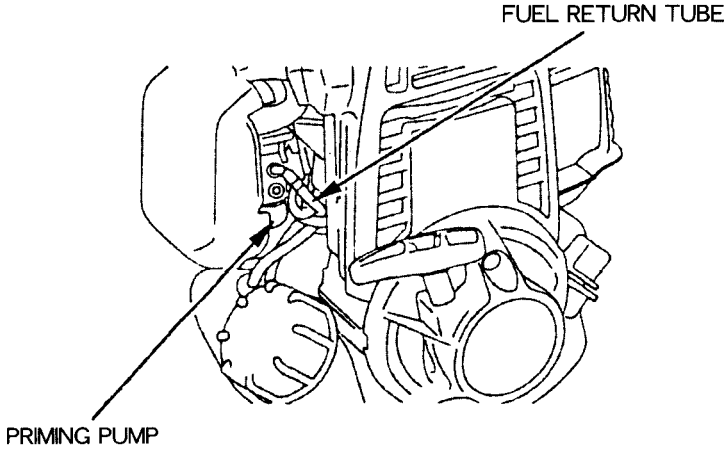

4. Pull the starter grip lightly until resistance is felt, then pull briskly.

CAUTION :
Do not allow the starter grip to snap back against the engine. Return it gently to prevent damage to the starter.

NOTE :
Always pull the starter grip briskly. If not pulled briskly, sparks may fail to jump across the spark plug electrodes, resulting in failure to start the engine.

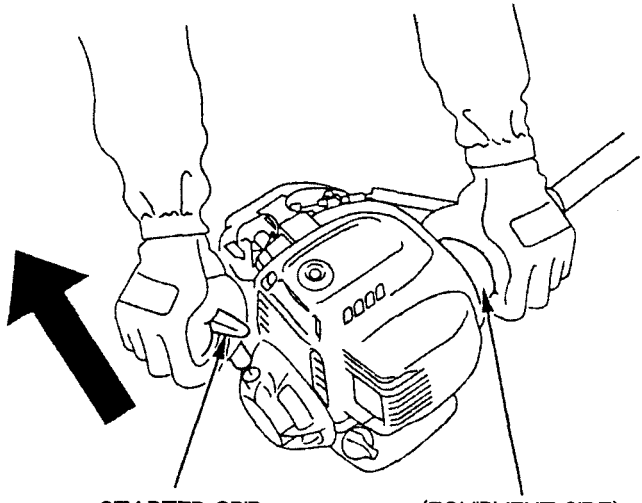

Idle-up function

The idle-up function is a function that helps an engine to start by opening the throttle valve in the carburetor moderately when the engine won't start.

1. Hold down the throttle trigger interlock.
2. Pull the throttle trigger.
3. Push the idle-up knob, then release the throttle trigger and throttle trigger interlock in that order.
4. Start the engine.

NOTE : This function must not be used while trimming work.

If the engine won't start after performing the idle-up function, consult the Honda servicing dealer.

Loop handle type:

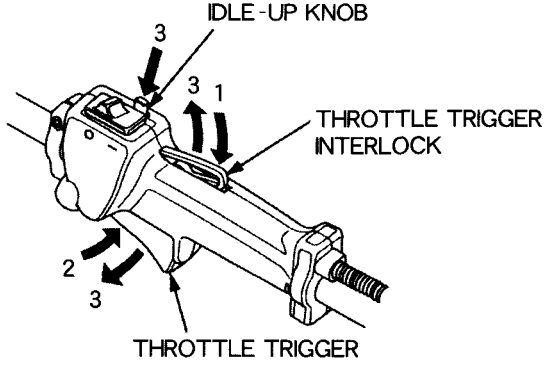

U-shaped handle type:

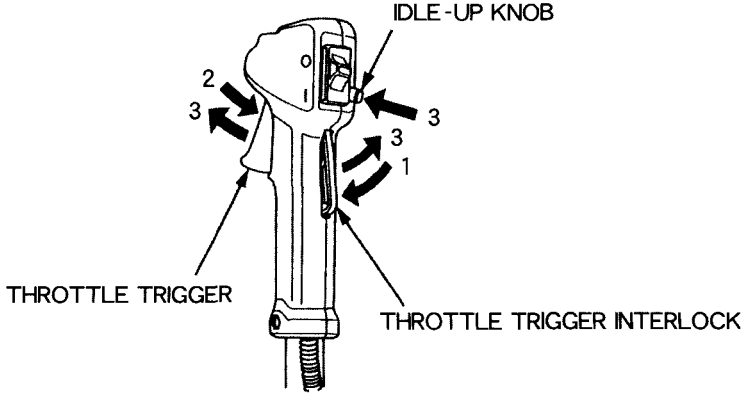

7. TRIMMING OPERATION

Read and understand the safety instructions on pages 4 to 13 before operating the grass/weed trimmer.
If you notice any abnormal sound, smell, vibration, or other unusual signs, stop the engine immediately and consult your authorized Honda dealer.

Grass/weed trimmer holding position adjustment:
Stop the engine and adjust the length of the carrying harness.

1. Adjust the carrying harness so that the quick-release latch is positioned a your right hip.
2. Hong the trimmer on the carrying harness hook by its hanger.
3. Keep the trimmer so that the cutting attachment (nylon-line cutting head or cutting blade) is parallel to the ground by holding the handle with your both hands.
4. Adjust the carrying harness length so that the cutting attachment is paralle to the ground and stays above the ground keeping the clearance specified below.

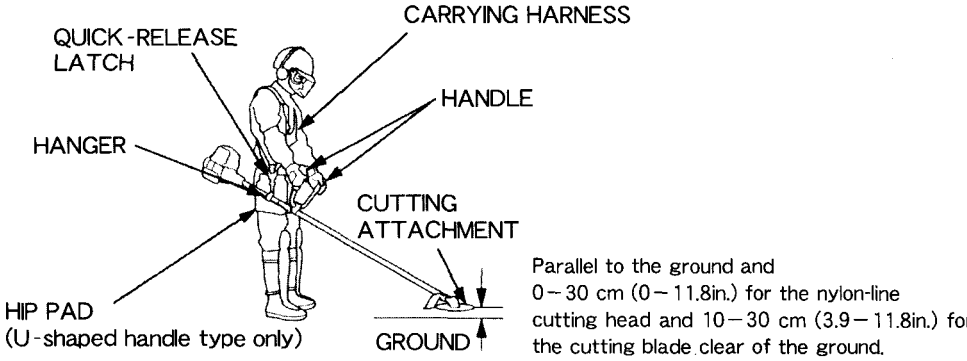

⚠WARNING Do not operate the grass/weed trimmer if the wheeling cutting attachment could reach your feet. Your feet can get injured if the wheeling cutting attachment touches your feet.

Stop the engine and check the balance of the grass/weed trimmer between its front and rear sides.

1. Hold the grass/weed trimmer at the correct position as mentioned above.
2. Slacken your grip on the handle gradually. Do not release but put your both hands lightly on the handle, and be sure that the height of the cutting attachment from the ground does not change large this time.
   Adjustment is necessary if the cutting attachment rises high above your knees. Do not operate the grass/weed trimmer before adjustment, and consult your authorized Honda dealer for adjustment.

Basic operation:

- With the engine idling, hook the trimmer to your carrying harness and hold the trimmer at the correct position. Be careful to avoid contact with the cutting attachment (nylon-line cutting head or cutting blade) while handling the trimmer with the engine running.

  The cutting attachment should not rotate with the engine idling. If there is rotation at idle, adjust the idle speed correctly before using the trimmer. For idle adjustment, consult your servicing dealer.

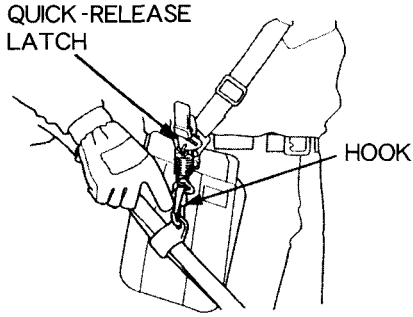

- Hold the trimmer firmly with both hands, with your fingers and thumbs encircling the handles as shown. This will help you to keep the trimmer under control at all times.

  - Keep firm footing and balance.
  - Do not overreach.
  - Keep the cutting attachment below your knee height.
  - Keep all part of your body away from the rotating cutting attachment and hot surfaces.

- Operate the grass/weed trimmer not by using your arm force but by using your waist so that the cutting attachment swings in a level arc from right to left.
  Hold the grass/weed trimmer so that you can shift your weight to the right leg then to the left leg safely and easily, and walk slowly.
- When operating the grass/weed trimmer on a moderate slope, stand at the down side of the slope. The steep slope is slippery and you can lose your balance. Do not operate the grass/weed trimmer on a steep slope.

CAUTION : Take good care of your step. Do not operate the grass/weed trimmer in a place where is slippery, or you can lose your balance.

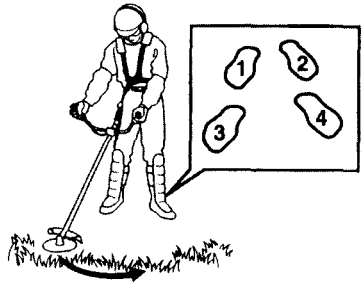

- In an emergency, pull up the quick-release latch tab to detach the grass/weed trimmer from the carrying harness.

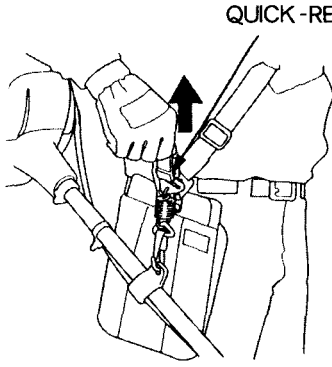

- Your grass/weed trimmer is not designed to cut down the trees. Do not use your grass/weed trimmer as a pruner hook.

8. STOPPING THE ENGINE

1. Release the throttle trigger.

2. Turn the engine switch to the OFF position.

CAUTION : Note that the cutting attachement keeps turning for a while by inertia after the engine is stopped.

Loop handle type:

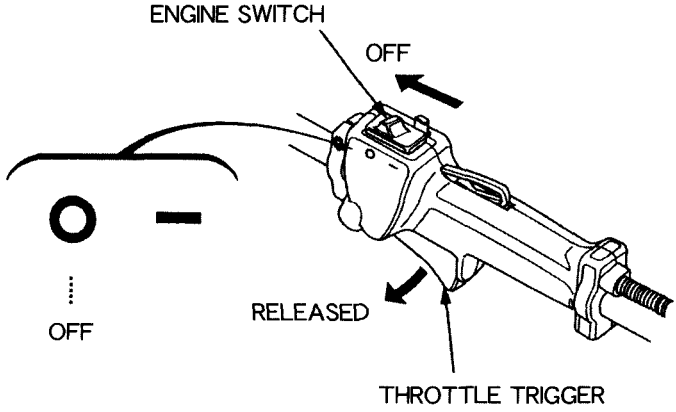

U-shaped handle type:

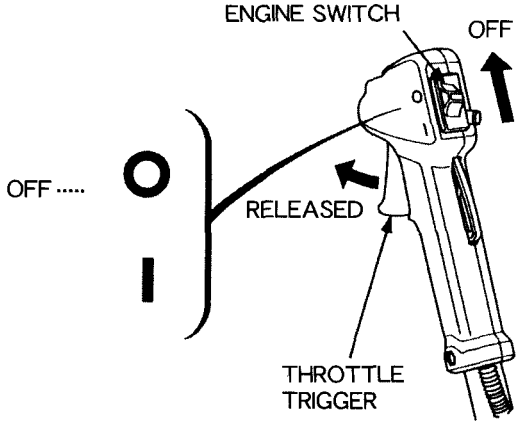

NOTE : Be sure that the engine is stopped and the cutting attachment stops turning before placing the grass/weed trimmer on the ground.

9. MAINTENANCE

⚠WARNING

- Before performing any maintenance, place the grass/weed trimmer on a level surface, stop the engine and remove the spark plug cap to be certain the engine will not start accidentally.
- The grass/weed trimmer should be serviced by an authorized Honda dealer unless the owner has proper tools and service data and feels he is mechanically qualified.

CAUTION : Use only genuine Honda parts or their equivalent for maintenance or repair. Replacement parts which are not of equivalent quality may damage the trimmer.

Periodic inspection and adjustment of the Honda Mpe 425 are essential if high level performance is to be maintained. Regular maintenance will also help to extend service life. The required service intervals and the kind of maintenance to be performed are described in chart on the following page.

For longer service and efficiency, keep the underside of the debris shield clean and free of accumulated grass clippings by washing it down with a hose after each use and/or cleaning it with a wire brush and scraper.

Maintenance schedule

REGULAR SERVICE PERIOD (3) Perform at every indicated month or operating hour interval, whichever comes first. ITEM		Before each use	First Month or 10 Hrs.	Every 3 Months or 25 Hrs.	Every 6 Months or 50 Hrs.	Every Year or 100 Hrs.	Every 2 years or After each 300 Hrs.	Refer to page
Engine oil	Check	○						23
	Change		○		○			45
Air cleaner	Check	○						28
	Clean			○ (1)				47
Cutting attachment	Check	○						30
Debris shield	Check	○						32
Nuts, bolts, fasteners	Check (Retighten if necessary)	○						33
Shoulder harness quick-release	Check	○						29
Throttle cable	Check	○						29, 53
Gear case	Lubricate				○ (2)			
Clutch shoes and drum	Check				○ (2)			
Spark plug	Clean-Adjust					○		51
	Replace						○	51
Engine cooling fins	Check				○			54
Idle speed	Check-Adjust					○ (2)		
Valve clearance	Check-Adjust					○ (2)		
Combustion chamber	Clean						○ (2)	
Fuel tank strainer	Check					○		55
Fuel tank	Clean					○		56
Fuel line	Check	Every 2 years [Replace (2) if necessary]						

NOTE : (1) Service more frequently when used in dusty areas.
(2) These items should be serviced by your servicing dealer, unless you have the proper tools and are mechanically proficient. Refer to Honda shop manual for service procedures.
(3) Log hours of operation to determine proper maintenance intervals.

Tool kit

The tools supplied are necessary for performing some periodic maintenance simple adjustments and repairs.

SPARK PLUG WRENCH

4 mm HEXAGON WRENCH
5 mm HEXAGON WRENCH

13 × 19 SCREW DRIVER

1. Engine oil change

NOTE :
- Drain the oil while the engine is still warm to assure rapid and complete draining.

1. Check the fuel tank cap is tightened.
2. Remove the oil filler cap and drain the oil into the oil container by tipping the engine toward the oil filler neck.
3. Refill with the recommended oil (see page 22) and check the oil level (see page 21).

ENGINE OIL CAPACITY (Disassembly):
0.08 ℓ (0.08 US qt, 0.07 Imp qt)
The oil capacity with replaced is less than the oil capacity with disassembled.

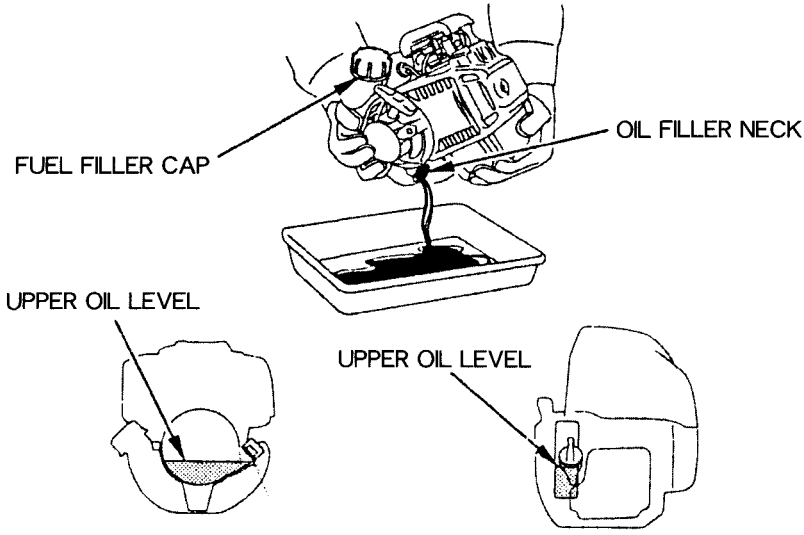

4. Install the oil filler cap.
If any oil is spilled, make sure to wipe it.
Wash your hands with soap and water after handling used oil.

NOTE : Please dispose of used motor oil in a manner that is compatible with the environment. We suggest you take it in a sealed container to your local service station for reclamation. Do not throw it in the trash or pour it on the ground.

2. Air cleaner service

A dirty air cleaner will restrict air flow to the carburetor. To prevent carburetor malfunction, service the air cleaner regularly. Service more frequently when operating the grass/weed trimmer in extremely dusty areas.

⚠WARNING Never use gasoline or low flash point solvents for cleaning the air cleaner element. A fire or explosion could result.

CAUTION : Never run the engine without the air cleaner. Rapid engine wear will result.

1. Move the choke lever to the CLOSED (upwards) position.
2. Remove the air cleaner cover by unhooking the upper tab on the top of the air cleaner cover and its two lower tabs.
3. Wash the element in a nonflammable or high flash point solvent and dry it thoroughly.
4. Soak the element in clean engine oil and squeeze out the excess oil.
5. Reinstall the air cleaner element.
6. Reinstall the air cleaner cover by inserting the lower tabs, then insert the upper tab.

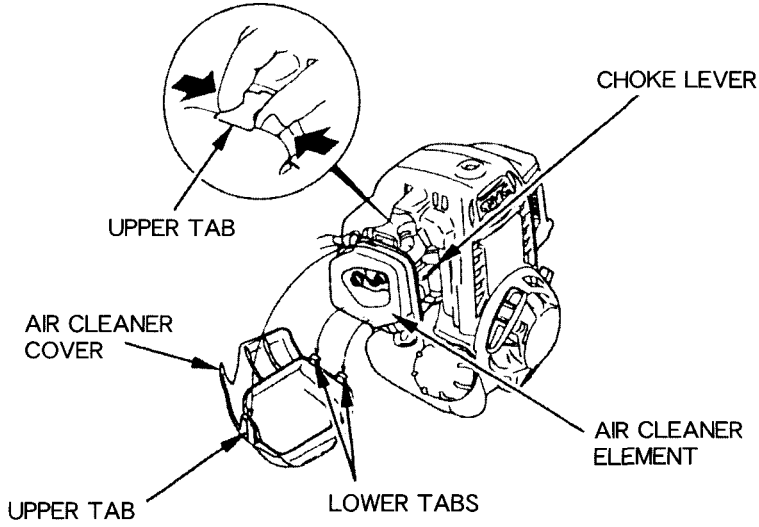

3. Cutting attachment replacement

Nylon-line cutting head:

⚠WARNING

- **To avoid severe personal injury, disconnect the spark plug cap to prevent accidental starting.**
- **Use a genuine Honda replacement cutting head or its equivalent.**

CAUTION : Wear heavy gloves to protect your hands when replacing the cutting head.

1. Stop the engine and remove the spark plug cap.
2. Insert a 4 mm hexagon wrench into the locking tool hole to keep the drive shaft from turning.
3. Turn the cutting head assembly clockwise to remove it from the gear case. Replace it with new one.

Cutting blade:

⚠WARNING

- **To avoid severe personal injury, disconnect the spark plug cap to prevent accidental starting.**
- **Use a genuine Honda replacement cutting blade or its equivalent.**

CAUTION : Wear heavy gloves to protect your hands, when working around the cutting blade.

1. Install a protective plastic cover (that came with the blade) on the edge of the cutting blade for safety and protecting the blade.
2. Insert the tip of the 4 mm hexagon wrench (supplied with your trimmer) fully into the hole on the gear case.
3. Turn the cutting blade until you feel the tool drops into the hole in the internal locking ring. Verify the blade does not turn. The drive bolt and blade nut use left-hand threads. Make sure the 4 mm hexagone wrench remains in the hole, then loosen (turn clockwise) the self-locking nut. Pay attention to the order and orientation of the parts as they are removed.
4. Installation can be performed in the reverse order of removal. Make sure you install the blade with the cutting edge in the direction of rotation. Torque the blade nut to 1.9 kgf-m (19 N•m, 14 ft-lb).

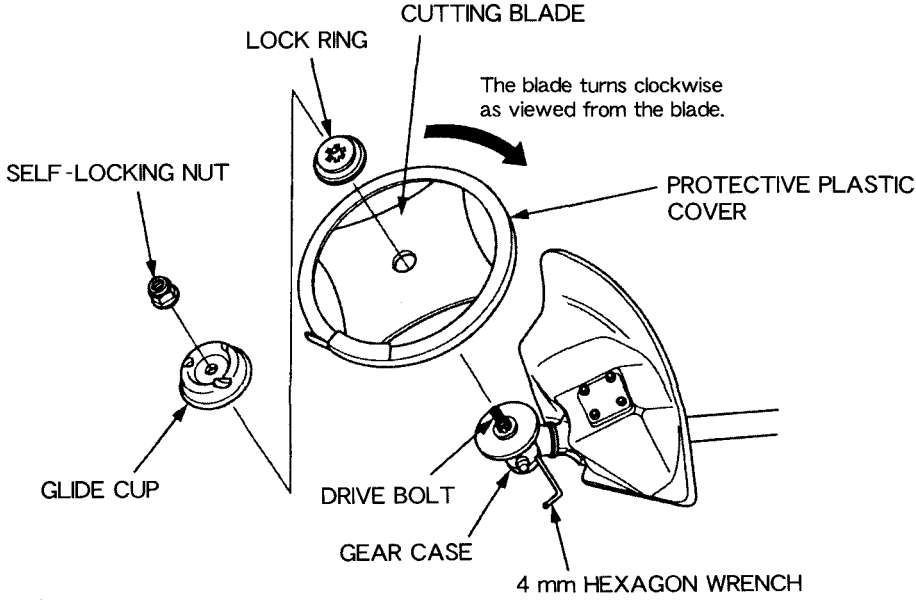

4. Debris shield change

⚠WARNING

- **Install the debris shield in the proper position securely to protect you from the debris that are thrown from a wheeling cutting attachment.**

CAUTION : Wear heavy gloves to protect your hands, when working around the cutting attachment.

Refer to the illustration below for removing and installing the debris shield. Note that the debris shield for the nylon-line cutting head uses an additional spacer plate and the longer 5×30 mm bolts.

Tighten the bolts securely. Torque the bolts to 0.34 kgf-m (3.4N•m, 2.5 ft-lb).

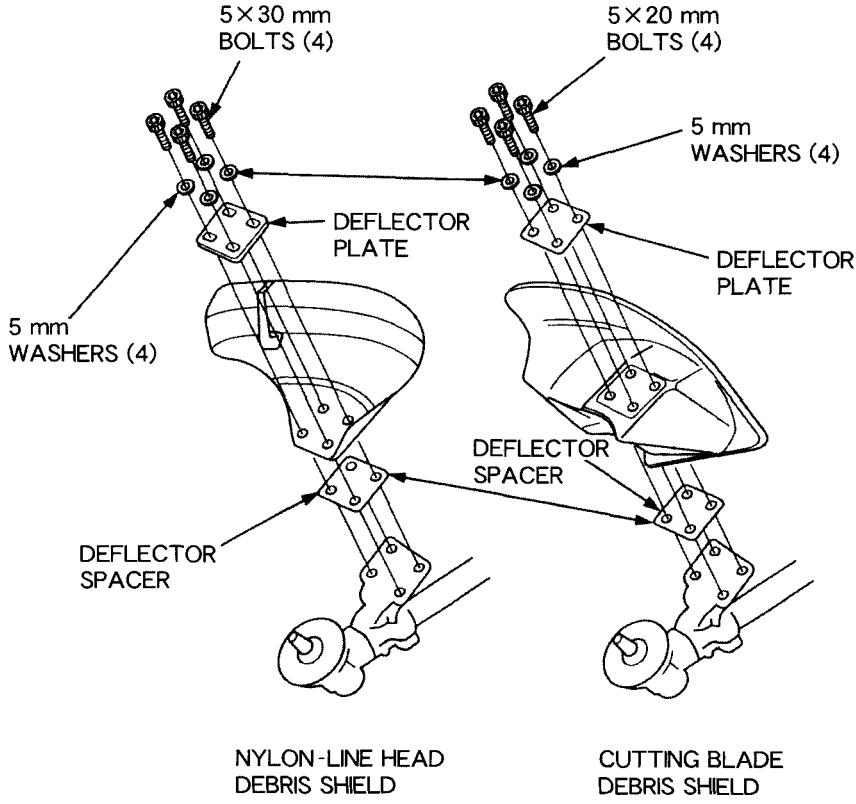

5. Spark plug service

Recommended spark plug:
CMR5H (NGK)

CAUTION :
Never use a spark plug of incorrect heat range.

To ensure proper engine operation, the spark plug must be properly gapped and free of deposits.

1. Loosen the 5 mm hex bolt, then remove the top cover.

   Do not pull the starter grip and start the engine without the top cover. There are rotating and hot parts under the cover.

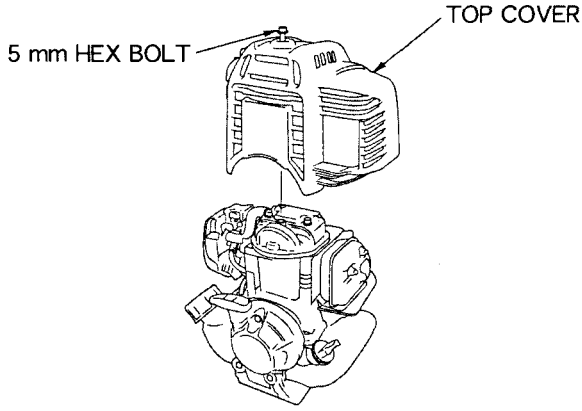

2. Remove any dirt from around the spark plug area.
3. Remove the spark plug cap and use the proper size spark plug wrench to remove the spark plug.

⚠WARNING

If the engine has been running, the muffler will be very hot. Be careful not to touch the muffler.

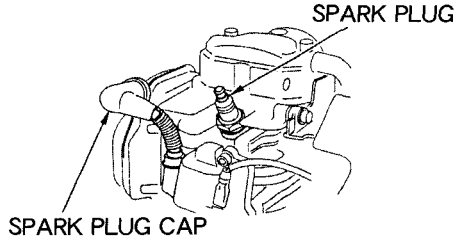

4. Visually inspect the spark plug. Discard the spark plug if there is apparent wear, or if the insulator is cracked or chipped. Clean the spark plug with a wire brush if it is to be reused.
5. Measure the plug gap with a feeler gauge. Correct as necessary by bending the side electrode.
   The gap should be:
   0.60 – 0.70 mm (0.024 – 0.028 in)

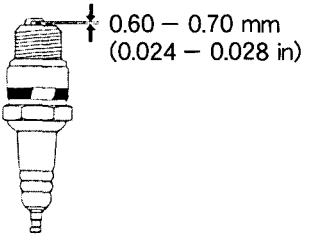

6. Check that the spark plug washer is in good condition and thread the spark plug in by hand to prevent cross-threading.
7. After the spark plug is seated, tighten with a spark plug wrench to compress the washer.

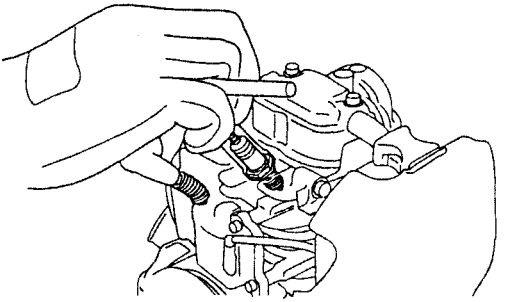

NOTE:
When installing a new spark plug, tighten 1/2 turn after the spark plug seats to compress the washer. When reinstalling a used spark plug, tighten 1/8 – 1/4 turn after the spark plug seats to compress the washer.

8. Attach the spark plug cap.
9. Install the top cover, and tightten the 5 mm hex bolt securely.

CAUTION:
The spark plug must be securely tightened. An improperly tightened *spark plug can become very hot and may damage the engine.*

6. Throttle cable check and adjustment

Adjust the throttle cable free play properly.

Adjustment:

1. Move the choke lever to the CLOSED (upwards) position.
2. Remove the air cleaner cover by unhooking the upper tab on the top of the air cleaner cover and its two lower tabs.
3. Loosen the throttle cable fixing nut.
4. Check the throttle cable free play at the tip of the cable by pulling and releasing the throttle trigger a few times and adjust the free play by using the adjusting nut. It should be 1 – 3 mm (0.039 – 0.118 in.) at the tip of the throttle cable.

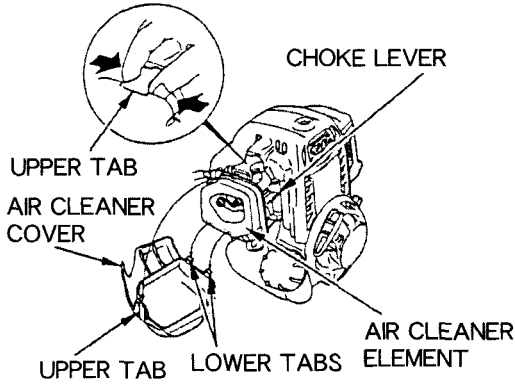

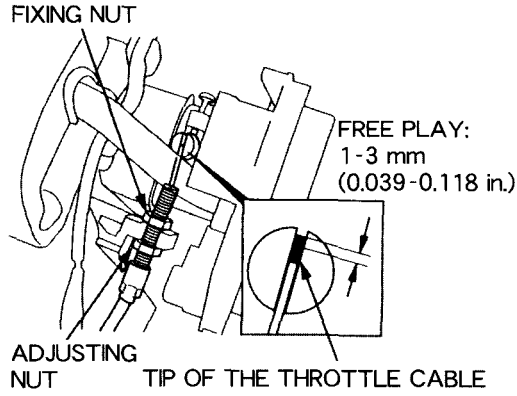

5. Reinstall the air cleaner cover by inserting the lower tabs, then insert the upper tab.

CAUTION:

- **After removing the air cleaner cover, reinstall the air cleaner cover securely.**
  Failure to tighten the cover securely may cause the cover to come out of position by vibration or some sort of engine malfunction.
- **Operating the engine without the air cleaner or improperly installed air cleaner will allow dirt to enter the inside of the engine, causing adverse effect to the engine.**

After adjustment, check the throttle trigger for smooth operation. Check the throttle cable free play at the tip of the cable again.
Consult your authorized Honda dealer if necessary.

Loop handle type:

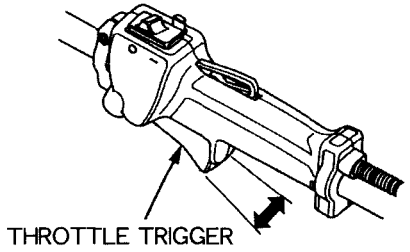

U-shaped handle type:

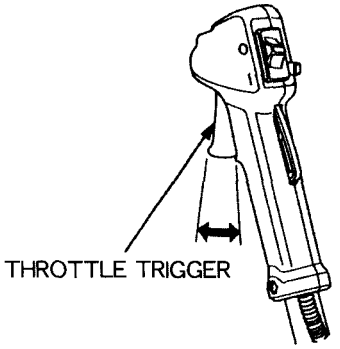

7. Engine cooling fin inspection

Inspect the cooling fin visually through the cover. If there are dry grass, leaves and mud clogged, consult your authorized Honda power equipment dealer for cleaning it.

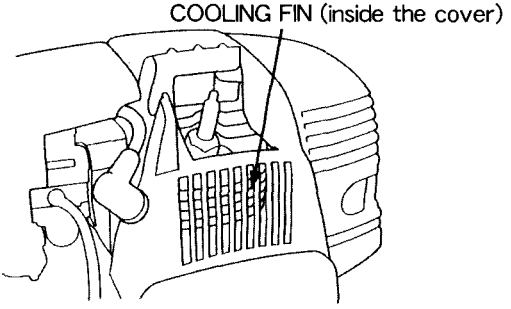

8. Fuel tank strainer service

Note that the clogged fuel filter can cause poor engine performance.

⚠WARNING Gasoline is extremely flammable and is explosive under certain conditions. You can be burned or seriously injured when handling fuel. Observe the following when servicing the fuel tank strainer.

- **Stop the engine.**
- **Inspect in a well-ventilated area.**
- **Keep heat, sparks, and flame away. Do not smoke.**
- **Do not spill the gasoline. If you spilled the gasoline, wipe it up immediately and dispose of the cloth or shop towel you wiped the spilled gasoline in a manner that is compatible with the environment.**

1. Be sure that the engine oil filler cap is tightened securely.
2. Remove the fuel tank cap and drain the gasoline into the container by tipping the engine toward the fuel filler neck.

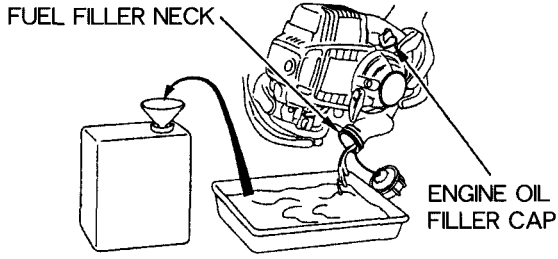

3. Pull out the fuel tank strainer with the mechanic's wire from the fuel filler neck gently.
4. Check the fuel tank strainer for contamination. If the fuel tank strainer is dirty, wash it gently with nonflammable or high flash point solvent. If the fuel tank strainer is excessively dirty, replace it.

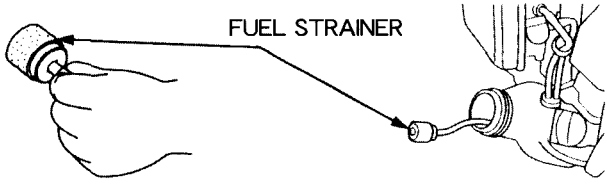

5. Reinstall the fuel tank strainer into the fuel tank and tighten the fuel tank cap securely.

9. Fuel tank cleaning

Water and dust, dirt or foreign material in the fuel tank cause a poor engine performance.

⚠WARNING Gasoline is extremely flammable and is explosive under certain conditions. You can be burned or seriously injured when handling fuel. Observe the following when cleaning the fuel tank.

- **Stop the engine.**
- **Inspect in a well-ventilated area.**
- **Keep heat, sparks, and flame away. Do not smoke.**
- **Do not spill the gasoline. If you spilled the gasoline, wipe it up immediately and dispose of the cloth or shop towel you wiped the spilled gasoline in a manner that is compatible with the environment.**

1. Be sure that the engine oil filler cap is tightened securely.
2. Remove the fuel tank cap and drain the gasoline into the container by tipping the engine toward the fuel filler neck.

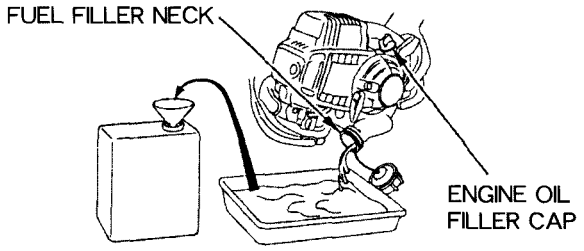

3. Pull out the fuel tank strainer with the mechanic's wire from the fuel filler neck gently.
4. Remove water and dirt stood in the fuel tank by rinsing the inside of the fuel tank with nonflammable or high flash point solvent.
5. Reinstall the fuel tank strainer into the fuel tank and tighten the fuel tank cap securely.

10. STORAGE

Proper storage preparation is essential for keeping your grass/weed trimmer trouble free and looking good. The following steps will help to keep rust and corrosion from impairing your grass/weed trimmer.

CAUTION:

- **If the grass/weed trimmer has been running, the engine will be very hot; allow it to cool before proceeding.**
- **Place the grass/weed trimmer on a level surface and remove the spark plug cap to be certain the engine will not start accidentally.**

1. Clean all exterior surfaces, touch up any damaged paint, and coat other areas that may rust with a light film of oil.
2. Drain the fuel.

⚠WARNING Gasoline is extremely flammable and explosive under certain conditions. Do not smoke or allow flames or sparks in the area.

a. Be sure that the engine oil filler cap is tightened securely.
b. Remove the fuel tank cap and drain the fuel into the container by tipping the engine toward the fuel filler neck.

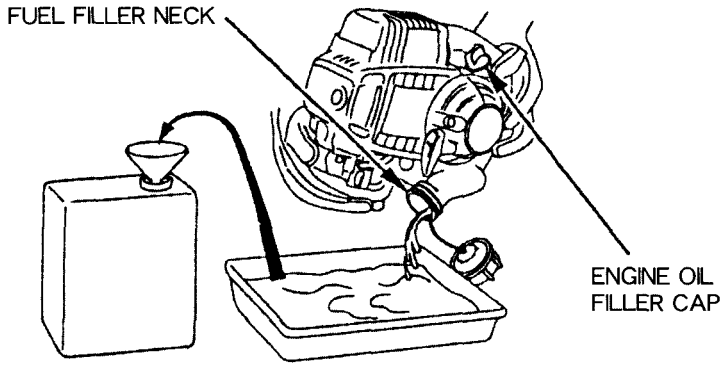

c. Press the priming pump several times until all fuel left in the fuel return tube is returned into the fuel tank.
d. Tip the engine toward the fuel filler neck again to drain the fuel left in the fuel tank into the container.
e. Tighten the fuel tank cap securely after draining the fuel completely.

3. Change the engine oil (see page 43).
4. Clean the air cleaner (see page 45).
5. Remove the spark plug and pour about a tablespoon of clean engine oil into the cylinder.
6. Crank the engine several revolutions to distribute the oil, then reinstall the spark plug. Pull the starter grip slowly until resistance is felt.
7. Cover the grass/weed trimmer to keep out dust.

When the engine will not start:

1. Is the engine switch in the ON position ?
2. Is there fuel in the fuel tank (see page 23) ?

⚠WARNING Gasoline is extremely flammable and explosive under certain conditions. Do not smoke or allow flames or sparks in the area.

3. Is gasoline reaching the carburetor ?
   To check, press the priming pump several times (see page 33).
4. Is there a spark at the spark plug (see page 49)?
   a. Remove the spark plug cap. Clean any dirt from around the spark plug base, then remove the spark plug.
   b. Install the spark plug in the plug cap.
   c. Turn the engine switch ON.
   d. Grounding the side electrode to the cooling fin below the spark plug hole, pull the recoil starter to see if sparks jump across the gap.
   e. If there is no spark, replace the spark plug.
   If OK, reinstall the spark plug and try to start the engine according to the instructions.

5. If the engine still does not start, take the grass/weed trimmer to an authorized Honda dealer.

When an abnormal vibration occurs during operation, immediately turn off the engine and check the cutting attachment is properly installed and tightened securely, and inspect it for wear, crack or any other damage. If necessary, replace it (see page 46).

Model UMK425

Frame

Type		LNU	U4U
Handle type		Loop	U-shaped
Overall length		1835	1860
Overall width		325	640
Overall height		240	450
Dry weight (without cutting head)		5.7	6.0
Clutch type		Centrifugal clutch	
Cutter	Tool	Nylon-line	Cutting blade
	Type	Tapz Go	4-tooth blade
	O.D.	420 mm	230 mm

Applicable debris shield

Type	LNU	U4U
For nylon-line cutting head	○	
For cutting blade		○

NOTE:
Specifications may vary according to the types, and are subject to change without notice.

Engine

MODEL	UMK425
Engine model	GX25
Engine description code	GCAAM
Engine type	4-stroke, over head, camshaft, 1 cylinder
Displacement	25 ㎤ (1.5 cu-in)
Bore × Stroke	35×26 mm (1.4×1.0 cu-in)
Max. output	0.81 kW (1.1PS) / 7,000 rpm
Max. torque	1.25 N·m (0.13 kgf-m) / 5,000 rpm
Fuel consumption	340 g / kWh (250g / PSh)
Cooling system	Forced air
Ignition system	Transistor magneto

NOTE:
Specifications may vary according to the types, and are subject to change without notice.

Part No. L1000 UT1001